# GRAS 40DP

## 1/8" Ext. Polarized Pressure Microphone

Freq range: 6.5 Hz to 140 kHz
Dyn range: 49 dB(A) to 178 dB
Sensitivity: 1 mV/Pa

The 40DP is an IEC 61094 ⅛ externally polarized pressure microphone with rear-venting. Due to its tiny size, this high-precision condenser microphone can be used to measure very high-frequency sounds without disturbing the sound field.

GRAS Sound & Vibration
Skovlytoften 33, 2840 Holte, Denmark
**www.grasacoustics.com**

## Introduction

The 40DP is an IEC 61094 ⅛″ externally polarized pressure microphone with rear-venting. Read about the prepolarized equivalent GRAS 40DD.

It is a high-precision condenser microphone made according to IEC 61094-4 requirements. Due to its tiny size, it can be used to measure very high frequency sounds without disturbing the sound field. It can measure sound pressure levels up to 174 dB in the range of 6.5 Hz to 140 kHz.

40DP is individually factory-calibrated and delivered with a calibration chart stating its specific open-circuit sensitivity and pressure frequency response.

## Typical applications and use

The 40DP has a low sensitivity making it perfect for sound measurements at high frequencies and very high pressure levels. The low sensitivity, together with the wide frequency response, makes the 40DP very suitable for impulse noises.

The 40DP can be used for making acoustic measurements in laminar airflow by mounting the RA0173 ⅛″ Nosecone in place of the microphone grid. The nosecone tip should point upstream in a laminar flow to reduce the turbulence created by the microphone itself in the airflow.

## Compatibility

The 40DP must be used with an adapter for mounting an ⅛″ microphone onto a ¼″ preamplifier.

## System verification

For daily verification and check of your measurement setup, we recommend using a calibrator like GRAS Sound Level Calibrator GRAS 42AG.

For proper sensitivity calibration, we recommend using a pistonphone like GRAS Intelligent Pistonphone GRAS 42AP.

## Calibration

When leaving the factory, all GRAS microphones have been calibrated in a controlled laboratory environment using traceable calibration equipment. Depending on the use, measurement environment and internal quality control programs we recommend that the microphone is recalibrated at least once a year.

We offer two kinds of calibration as an optional after-sales service: GRAS Traceable Calibration and GRAS Accredited Calibration.

GRAS Traceable Calibration is a traceable calibration performed by trained personnel under controlled conditions according to established procedures and standards. This is identical to the rigorous calibration that all GRAS microphones are subjected to as an integral part of our quality assurance.

GRAS Accredited Calibration is performed by the GRAS Accredited Calibration Laboratory that has been accredited in accordance with ISO 17025 by DANAK, the Danish Accreditation Fund.

If you want a new microphone set delivered with an accredited calibration in stead of the default factory calibration, specify this when ordering.

Learn more at gras/calib.

## Quality and warranty

All GRAS microphones are made of high-quality materials that will ensure life-long stability and robustness. The microphones are all assembled in verified clean-room environments by skilled and dedicated operators with many years of expertise in this field.

# Technology

The microphone diaphragm, body, and improved protection grid are made of high-grade stainless steel, which makes the microphone resistant to physical damage, as well as corrosion caused by aggressive air or gasses.

This, combined with the reinforced gold-plated microphone terminal which guarantees a highly reliable connection, enables GRAS to offer 5 years warranty against defective materials and workmanship.

## Service

If you accidentally damage the diaphragm on a GRAS microphone, we can — in most cases — replace it at a very reasonable cost and with a short turn-around time. This not only protects your investment, but also pleases your quality assurance department because you don't have to worry about new serial numbers, etc.

# Specifications

| | | |
|---|---|---|
| Polarization/Connection | | 200 V / Traditional |
| Frequency range (±1 dB) | Hz | 10 to 25 k |
| Frequency range (±2 dB) | Hz | 6.5 to 140 k |
| Dynamic range lower limit with GRAS preamplifier | dB(A) | 52 |
| Dynamic range upper limit | dB | 178 |
| Dynamic range upper limit with GRAS preamplifier @ +28 V / ±14 V power supply | dB | 175 |
| Dynamic range upper limit with GRAS preamplifier @ +120 V / ±60 V power supply | dB | 178 |
| Open-circuit sensitivity @ 250 Hz (±3 dB) | mV/Pa | 1 |
| Open-circuit sensitivity @ 250 Hz (±3 dB) | dB re 1V/Pa | -60 |
| Resonance frequency | kHz | 160 |
| Microphone cartridge capacitance, typ. | pF | 3.5 |
| Microphone venting | | Rear |
| IEC 61094-4 Compliance | | WS3P |
| Temperature range, operation | °C / °F | -40 to 150 / -40 to 302 |
| IEC 61094-4 Designation | | WS2F |
| Temperature range, storage | °C / °F | -40 to 85 / -40 to 185 |
| Temperature coefficient @250 Hz | dB/°C / dB/°F | -0.01 / -0.006 |
| Humidity range non condensing | % RH | 0 to 90 |
| Static pressure coefficient @250 Hz | dB/kPa | -0.008 |
| Humidity coefficient @250 Hz | dB/% RH | -0.0013 |
| Influence of axial vibration @1 m/s² | dB re 20 µPa | 55 |
| CE/RoHS compliant/WEEE registered | | Yes / Yes, Yes |
| Weight | g / oz | 1.5 / 0.053 |

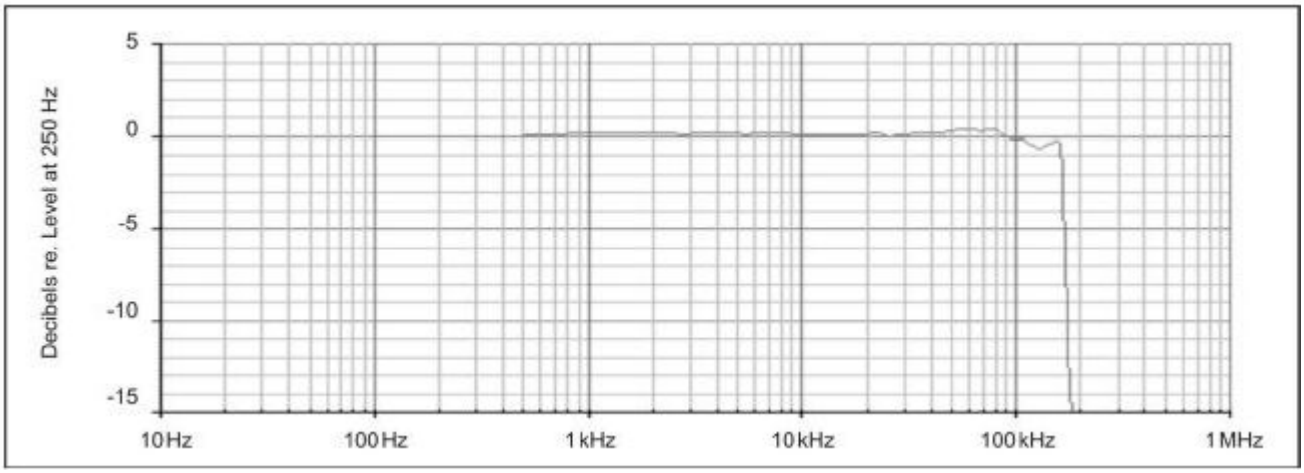


*Typical frequency response (without protection grid).*

GRAS Sound & Vibration reserves the right to change specifications and accessories without notice.

# Dimensions

Dimensions in mm

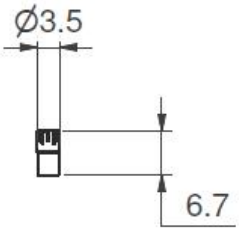


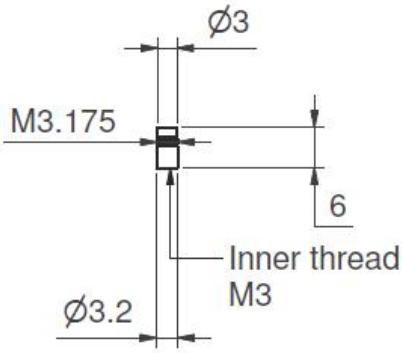

# Ordering info

| | |
|---|---|
| GRAS CA0001 | Traceable Calibration of Microphone |
| GRAS CA2001 | Accredited Calibration of Microphone |

GRAS Sound & Vibration reserves the right to change specifications and accessories without notice.

# GRAS Worldwide

Subsidiaries and distributors in more than 40 countries


**HEAD OFFICE, DENMARK**
**GRAS SOUND & VIBRATION**
Skovlytoften 33
2840 Holte
Denmark
Tel: +45 4566 4046
www.GRASacoustics.com
gras@grasacoustics.com

**USA**
**GRAS SOUND & VIBRATION**
9290 SW Nimbus Avenue
Beaverton, OR 97008
Tel: 503-627-0832
Toll Free: 800-231-7350
www.GRASacoustics.com
sales-usa@grasacoustics.com

**UK**
**GRAS SOUND & VIBRATION**
Unit 115, Gibson House,
Ermine Business Park, Huntingdon,
Cambridgeshire, PE29 6XU
Tel: +44 (0)7762 584 202
www.GRASacoustics.com
sales-uk@grasacoustics.com

**CHINA**
**GRAS SOUND & VIBRATION**
Room 502, Building T1,
No.1398 Ali Center
Shenchang Road,
Minhang District,
Shanghai, China, 201107
Tel: +86 21 400-888-9826
www.GRASacoustics.cn
cnsales@grasacoustics.com

**About GRAS Sound & Vibration**

GRAS is a worldwide leader in the sound and vibration industry. We develop and manufacture state-of-the-art measurement microphones to industries where acoustic measuring accuracy and repeatability is of utmost importance in R&D, QA and production. This includes applications and solutions for customers within the fields of aerospace, automotive, audiology, and consumer electronics. GRAS microphones are designed to live up to the high quality, durability and accuracy that our customers have come to expect and trust.

GRAS Sound & Vibration is represented through subsidiaries and distributors in more than 40 countries and is part of Axiometrix Solutions, a leading test solutions provider comprised of globally recognized measurement brands. Read more at www.GRASacoustics.com

**www.GRASacoustics.com**

GRAS

*An Axiometrix Solutions Brand*