GRAS 40DD

1/8" Prepolarized Pressure Microphone

Freq range: 6.5 Hz to 140 kHz
Dyn range: 49 dB(A) to 175 dB
Sensitivity: 0.9 mV/Pa

The 40DD is an IEC 61094 1/8" prepolarized pressure microphone with rear-venting. It is a high-precision condenser microphone made according to IEC 61094-4 requirements. Its tiny size allows it to be used for measuring very high frequency sounds without disturbing the sound field. It can measure sound pressure levels up to 174 dB in the range of 6 Hz to 140 kHz.

GRAS Sound & Vibration
Skovlytoften 33, 2840 Holte, Denmark
www.grasacoustics.com

Introduction

The 40DD is an IEC 61094 1/8" prepolarized pressure microphone with rear-venting. Read about the externally polarized equivalent GRAS 40DP

It is a high-precision condenser microphone made according to IEC 61094-4 requirements. Its tiny size allows it to be used for measuring very high frequency sounds without disturbing the sound field. It can measure sound pressure levels up to 174 dB in the range of 6 Hz to 140 kHz.

40DD is individually factory-calibrated and delivered with a calibration chart stating its specific open-circuit sensitivity and pressure frequency response.

A front-vented version is available, 40DD-FV 1/8'' Prepolarized Pressure Microphone, Front Vented.

Typical applications and use

The 40DD has a low sensitivity making it perfect for sound measurements at high frequencies and very high level pressure, as well as impulse noises.

The 40DD is included in the 67SB Blast Probe Microphone because of its wide-frequency response.

Compatibility

The 40DD must be used with an adapter for mounting a 1/8" microphone onto a 1/4" preamplifier.

System verification

For daily verification and check of your measurement setup, we recommend using a calibrator like GRAS GRAS 42AG Multifunction Sound Level Calibrator.

For proper sensitivity calibration, we recommend using a pistonphone like GRAS Intelligent Pistonphone GRAS 42AP.

Calibration

When leaving the factory, all GRAS microphones have been calibrated in a controlled laboratory environment using traceable calibration equipment. Depending on the use, measurement environment and internal quality control programs we recommend that the microphone is recalibrated at least once a year.

We offer two kinds of calibration as an optional after-sales service: GRAS Traceable Calibration and GRAS Accredited Calibration.

GRAS Traceable Calibration is a traceable calibration performed by trained personnel under controlled conditions according to established procedures and standards. This is identical to the rigorous calibration that all GRAS microphones are subjected to as an integral part of our quality assurance.

GRAS Accredited Calibration is performed by the GRAS Accredited Calibration Laboratory that has been accredited in accordance with ISO 17025 by DANAK, the Danish Accreditation Fund.

If you want a new microphone set delivered with an accredited calibration in stead of the default factory calibration, specify this when ordering.

Learn more at gras/calib.

Quality and warranty

All GRAS microphones are made of high-quality materials that will ensure life-long stability and robustness. The microphones are all assembled in verified clean-room environments by skilled and dedicated operators with many years of expertise in this field.

The microphone diaphragm, body, and improved

protection grid are made of high-grade stainless steel, which makes the microphone resistant to physical damage, as well as corrosion caused by aggressive air or gasses.

This, combined with the reinforced gold-plated microphone terminal which guarantees a highly reliable connection, enables GRAS to offer 5 years warranty against defective materials and workmanship.

Service

If you accidentally damage the diaphragm on a GRAS microphone, we can—in most cases—replace it at a very reasonable cost and with a short turn-around time. This not only protects your investment, but also pleases your quality assurance department because you don't have to worry about new serial numbers, etc.

Specifications

Polarization/Connection		0 V / CCP
Frequency range (±1 dB)	Hz	10 to 25 k
Frequency range (±2 dB)	Hz	6.5 to 70 k
Frequency range (±3 dB)	Hz	6.5 to 140 k
Dynamic range lower limit (microphone thermal noise)	dB(A)	49
Dynamic range lower limit with GRAS preamplifier	dB(A)	52
Dynamic range upper limit	dB	175
Dynamic range upper limit with GRAS preamplifier @ +28 V / ±14 V power supply	dB	175
Dynamic range upper limit with GRAS preamplifier @ +120 V / ±60 V power supply	dB	175
Dynamic range upper limit with GRAS preamplifier	dB	175
Open-circuit sensitivity @ 250 Hz (±3 dB)	mV/Pa	0.9
Resonance frequency	kHz	160
Microphone cartridge capacitance, typ.	pF	3.5
Microphone venting		Rear
IEC 61094-4 Compliance		WS3P
Temperature range, operation	°C / °F	-40 to 120 / -40 to 248
IEC 61094-4 Designation		WS2F
Temperature range, storage	°C / °F	-40 to 85 / -40 to 185
Temperature coefficient @250 Hz	dB/°C / dB/°F	-0.01 / -0.006
Humidity range non condensing	% RH	0 to 90
Static pressure coefficient @250 Hz	dB/kPa	-0.014
Humidity coefficient @250 Hz	dB/% RH	-0.001
Influence of axial vibration @1 m/s²	dB re 20 µPa	59
CE/RoHS compliant/WEEE registered		Yes / Yes, Yes
Weight	g / oz	1.5 / 0.053

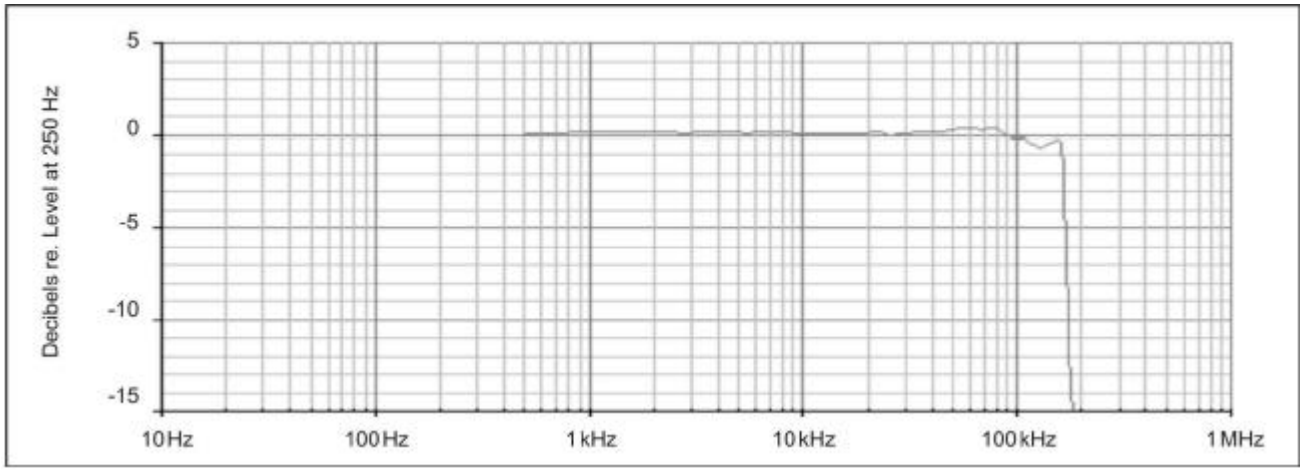

Typical frequency response (without protection grid).

GRAS Sound & Vibration reserves the right to change specifications without notice.

Dimensions

Dimensions in mm

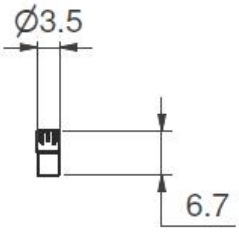

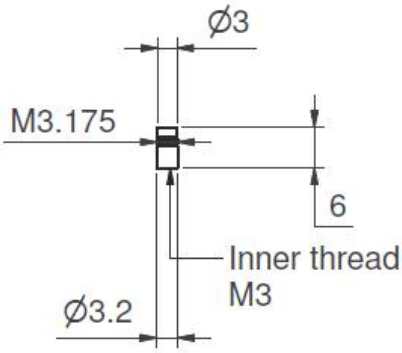

Ordering info

GRAS 40DD	1/8'' Prepolarized Pressure Microphone. This is the standard rear vented version
GRAS 40DD-FV	1/8'' Prepolarized Pressure Microphone, Front Vented. Identical to 40DD, but front vented
GRAS CA0001	Traceable Calibration of Microphone
GRAS CA2001	Accredited Calibration of Microphone

GRAS Sound & Vibration reserves the right to change accessories without notice.

GRAS Worldwide

Subsidiaries and distributors in more than 40 countries

HEAD OFFICE, DENMARK
GRAS SOUND & VIBRATION
Skovlytoften 33
2840 Holte
Denmark
Tel: +45 4566 4046
www.GRASacoustics.com
gras@grasacoustics.com

USA
GRAS SOUND & VIBRATION
9290 SW Nimbus Avenue
Beaverton, OR 97008
Tel: 503-627-0832
Toll Free: 800-231-7350
www.GRASacoustics.com
sales-usa@grasacoustics.com

UK
GRAS SOUND & VIBRATION
Unit 115, Gibson House,
Ermine Business Park, Huntingdon,
Cambridgeshire, PE29 6XU
Tel: +44 (0)7762 584 202
www.GRASacoustics.com
sales-uk@grasacoustics.com

CHINA
GRAS SOUND & VIBRATION
Room 502, Building T1,
No.1398 Ali Center
Shenchang Road,
Minhang District,
Shanghai, China, 201107
Tel: +86 21 400-888-9826
www.GRASacoustics.cn
cnsales@grasacoustics.com

About GRAS Sound & Vibration

GRAS is a worldwide leader in the sound and vibration industry. We develop and manufacture state-of-the-art measurement microphones to industries where acoustic measuring accuracy and repeatability is of utmost importance in R&D, QA and production. This includes applications and solutions for customers within the fields of aerospace, automotive, audiology, and consumer electronics. GRAS microphones are designed to live up to the high quality, durability and accuracy that our customers have come to expect and trust.

GRAS Sound & Vibration is represented through subsidiaries and distributors in more than 40 countries and is part of Axiometrix Solutions, a leading test solutions provider comprised of globally recognized measurement brands. Read more at www.GRASacoustics.com

www.GRASacoustics.com

GRAS

An Axiometrix Solutions Brand