GRAS 40BH

1/4" Ext. Polarized Pressure Microphone, High Pressure

Freq range: 10 Hz to 20 kHz
Dyn range: 54 dB(A) to 193 dB
Sensitivity: 0.4 mV/Pa

The 40BH is an IEC 61094 WS3P ¼" externally polarized high-pressure microphone with rear-venting. It is a high-precision condenser microphone made according to IEC 61094-4 requirements. Its very low sensitivity and wide frequency response make it ideal for measuring very high sound pressure levels of up to 194 dB. It is extremely robust and reliable and can handle acoustic impulse measurements in frequencies of up to 20 kHz.

NOTE: Optimized for use without protection grid—remove grid before measuring.

GRAS Sound & Vibration
Skovlytoften 33, 2840 Holte, Denmark
www.grasacoustics.com

Introduction

The 40BH is an IEC 61094 WS3P ¼" externally polarized high-pressure microphone with rear-venting.

40BH is a high-precision condenser microphone made according to IEC 61094-4 requirements. Its very low sensitivity and wide frequency response make it ideal for measuring very high sound pressure levels of up to 194 dB. It is extremely robust and reliable and can handle acoustic impulse measurements in frequencies of up to 20 kHz.

40BH is individually factory calibrated and delivered with a calibration chart stating its specific open-circuit sensitivity and pressure frequency response.

NOTE: At low frequencies, protection grids are acoustically transparent; however, around 20 kHz and above, protection grids can act as resonators and influence the frequency response. So for higher frequency measurements, ¼ and ⅛ microphones have been optimized for use without the protection grid. Please remove the protection grid when measuring.

Typical applications and use

40BH is typically used for sound pressure, very high level measurements, and impulse-sound measurements. It is suitable for general purpose acoustic measurements in couplers and at boundaries.

The 40BH is a very versatile microphone when connected to the RA0086 Transmitter Adapter for ¼" Microphones. The 40BH becomes a high-impedance sound source when the RA0086 takes a calibration signal directly from the signal generator and makes the microphone behave like an electrostatic loudspeaker. When used for calibrating an acoustic coupler, this gives a frequency response that is as good as when the 40BH behaves like a microphone.

Compatibility

The 40BH requires a standardized ½" or ¼" LEMO preamplifier and an input module that supports this technology with a 7-pin LEMO connector.

System verification

For daily verification and check of your measurement setup, we recommend using a calibrator like GRAS Sound Level Calibrator 42AG.

For proper sensitivity calibration, we recommend using a pistonphone like GRAS Intelligent Pistonphone 42AP.

Calibration

When leaving the factory, all GRAS microphones have been calibrated in a controlled laboratory environment using traceable calibration equipment. Depending on the use, measurement environment and internal quality control programs we recommend that the microphone is recalibrated at least once a year.

We offer two kinds of calibration as an optional after-sales service: GRAS Traceable Calibration and GRAS Accredited Calibration.

GRAS Traceable Calibration is a traceable calibration performed by trained personnel under controlled conditions according to established procedures and standards. This is identical to the rigorous calibration that all GRAS microphones are subjected to as an integral part of our quality assurance.

GRAS Accredited Calibration is performed by the GRAS Accredited Calibration Laboratory that has been accredited in accordance with ISO 17025 by DANAK, the Danish Accreditation Fund.

If you want a new microphone set delivered with an

accredited calibration in stead of the default factory calibration, specify this when ordering.

Learn more at gras/calib.

Quality and warranty

All GRAS microphones are made of high-quality materials that will ensure life-long stability and robustness. The microphones are all assembled in verified clean-room environments by skilled and dedicated operators with many years of expertise in this field.

The microphone diaphragm, body, and improved protection grid are made of high-grade stainless steel, which makes the microphone resistant to physical damage, as well as corrosion caused by aggressive air or gasses.

This, combined with the reinforced gold-plated microphone terminal which guarantees a highly reliable connection, enables GRAS to offer five-year warranty against defective materials and workmanship.

Service

If you accidentally damage the diaphragm on a GRAS microphone, we can — in most cases — replace it at a very reasonable cost and with a short turn-around time. This not only protects your investment, but also pleases your quality assurance department because you don't have to worry about new serial numbers, etc.

Specifications

Polarization/Connection		200 V / Traditional
Frequency range (±2 dB)	Hz	10 to 20 k
Dynamic range lower limit (microphone thermal noise)	dB(A)	54
Dynamic range lower limit with GRAS preamplifier	dB(A)	62
Dynamic range upper limit	dB	193
Dynamic range upper limit with GRAS preamplifier @ +28 V / ±14 V power supply	dB	181
Dynamic range upper limit with GRAS preamplifier @ +120 V / ±60 V power supply	dB	193
Open-circuit sensitivity @ 250 Hz (±2 dB)	mV/Pa	0.4
Open-circuit sensitivity @ 250 Hz (±2 dB)	dB re 1V/Pa	-68
Microphone cartridge capacitance, typ.	pF	6
Microphone venting		Rear
Temperature range, operation	°C / °F	-40 to 150 / -40 to 302
IEC 61094-4 Designation		WS3P
Temperature range, storage	°C / °F	-40 to 85 / -40 to 185
Temperature coefficient @250 Hz	dB/°C / dB/°F	-0.01 / -0.006
Humidity range non condensing	% RH	0 to 90
Static pressure coefficient @250 Hz	dB/kPa	-0.01
Humidity coefficient @250 Hz	dB/% RH	-0.001
CE/RoHS compliant/WEEE registered		Yes / Yes, Yes
Weight	g / oz	1.5 / 0.053

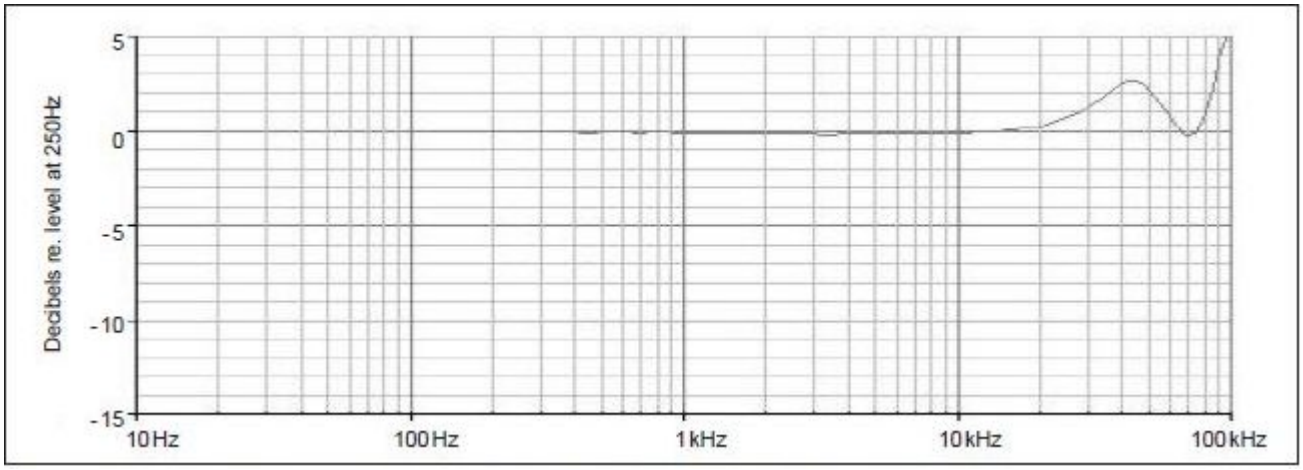

Typical frequency response (without protection grid)

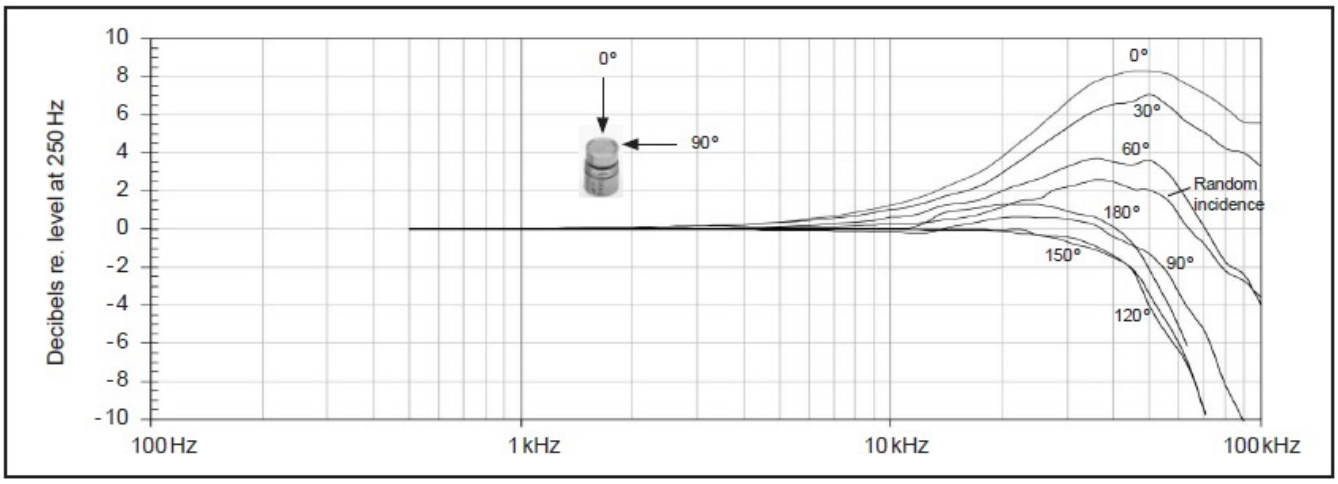

Free-field corrections for different angles of incidence

GRAS Sound & Vibration reserves the right to change specifications and accessories without notice.

Dimensions

Dimensions in mm

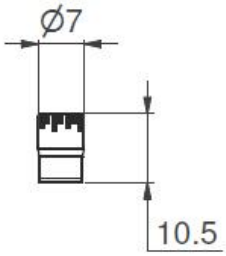

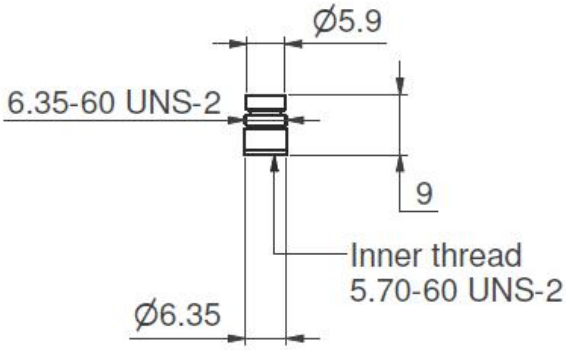

Optional items

GRAS RA0086	Transmitter adapter for ¼" microphones
GRAS CA0001	Traceable Calibration of Microphone
GRAS CA2001	Accredited Calibration of Microphone

GRAS Sound & Vibration reserves the right to change specifications and accessories without notice.

GRAS Worldwide

Subsidiaries and distributors in more than 40 countries

HEAD OFFICE, DENMARK
GRAS SOUND & VIBRATION
Skovlytoften 33
2840 Holte
Denmark
Tel: +45 4566 4046
www.GRASacoustics.com
gras@grasacoustics.com

USA
GRAS SOUND & VIBRATION
9290 SW Nimbus Avenue
Beaverton, OR 97008
Tel: 503-627-0832
Toll Free: 800-231-7350
www.GRASacoustics.com
sales-usa@grasacoustics.com

UK
GRAS SOUND & VIBRATION
Unit 115, Gibson House,
Ermine Business Park, Huntingdon,
Cambridgeshire, PE29 6XU
Tel: +44 (0)7762 584 202
www.GRASacoustics.com
sales-uk@grasacoustics.com

CHINA
GRAS SOUND & VIBRATION
Room 502, Building T1,
No.1398 Ali Center
Shenchang Road,
Minhang District,
Shanghai, China, 201107
Tel: +86 21 400-888-9826
www.GRASacoustics.cn
cnsales@grasacoustics.com

About GRAS Sound & Vibration

GRAS is a worldwide leader in the sound and vibration industry. We develop and manufacture state-of-the-art measurement microphones to industries where acoustic measuring accuracy and repeatability is of utmost importance in R&D, QA and production. This includes applications and solutions for customers within the fields of aerospace, automotive, audiology, and consumer electronics. GRAS microphones are designed to live up to the high quality, durability and accuracy that our customers have come to expect and trust.

GRAS Sound & Vibration is represented through subsidiaries and distributors in more than 40 countries and is part of Axiometrix Solutions, a leading test solutions provider comprised of globally recognized measurement brands. Read more at www.GRASacoustics.com

www.GRASacoustics.com

GRAS

An Axiometrix Solutions Brand