GRAS 40BE-FV

1/4" Prepolarized Free-field Microphone, Front Vented

Freq range: 4 Hz to 80 kHz
Dyn range: 30 dB(A) to 168 dB
Sensitivity: 4 mV/Pa

The 40BE-FV is an IEC 61094 WS3F 1/4" prepolarized free-field microphone with front venting.
NOTE: Optimized for use without protection grid—remove grid before measuring.

GRAS Sound & Vibration
Skovlytoften 33, 2840 Holte, Denmark
www.grasacoustics.com

Introduction

It is a high-precision condenser microphone made according to IEC 61094-4 requirements. Its dynamic range makes it suitable for high-frequency or high-level measurements, as well as acoustic transient measurements. It is extremely robust and reliable and can measure sound pressure levels up to 168 dB in the range of 4 Hz to 100 kHz.

40BE-FV is individually factory-calibrated and delivered with a calibration chart stating its specific open-circuit sensitivity and pressure frequency response.

NOTE: At low frequencies, protection grids are acoustically transparent; however, around 20 kHz and above, protection grids can act as resonators and influence the frequency response. So for higher frequency measurements, ¼ and ⅛ microphones have been optimized for use without the protection grid. Please remove the protection grid when measuring.

Typical applications and use

The 40BE-FV is ideal for sound measurements at very high frequencies and levels, as well as acoustic transient measurements. It is suitable for general purpose measurements in open acoustic fields.

Compatibility

The 40BE-FV requires a standardized 1/2" or 1/4" CCP preamplifier and an input module that supports this technology with a BNC, SMB, or Microdot connector.

System verification

For daily verification and check of your measurement setup, we recommend using a calibrator like GRAS 42AG Sound Level Calibrator.

For proper sensitivity calibration, we recommend using a pistonphone like GRAS 42AP Intelligent Pistonphone.

Quality and warranty

All GRAS microphones are made of high-quality materials that will ensure life-long stability and robustness. The microphones are all assembled in verified clean-room environments by skilled and dedicated operators with many years of expertise in this field.

The microphone diaphragm, body, and improved protection grid are made of high-grade stainless steel, which makes the microphone resistant to physical damage, as well as corrosion caused by aggressive air or gasses.

This, combined with the reinforced gold-plated microphone terminal which guarantees a highly reliable connection, enables GRAS to offer 5 years warranty against defective materials and workmanship.

Service

If you accidentally damage the diaphragm on a GRAS microphone, we can—in most cases—replace it at a very reasonable cost and with a short turn-around time. This not only protects your investment, but also pleases your quality assurance department because you don't have to worry about new serial numbers, etc.

Calibration

Before leaving the factory, all GRAS microphones are calibrated in a controlled laboratory environment using traceable calibration equipment.

Depending on the use, measurement environment, and internal quality control programs, we recommend recalibrating the microphone at least once a year.

Specifications

Polarization/Connection		0 V / CCP
Frequency range (±1 dB)	Hz	10 to 40 k
Frequency range (±2 dB)	Hz	4 to 80 k
Frequency range (±3 dB)	Hz	4 to 100 k
Dynamic range lower limit (microphone thermal noise)	dB(A)	30
Dynamic range lower limit with GRAS preamplifier	dB(A)	35
Dynamic range upper limit	dB	168
Dynamic range upper limit with GRAS preamplifier @ +28 V / ±14 V power supply	dB	164
Dynamic range upper limit with GRAS preamplifier @ +120 V / ±60 V power supply	dB	168
Dynamic range upper limit with GRAS preamplifier	dB	160
Open-circuit sensitivity @ 250 Hz (±3 dB)	mV/Pa	4
Open-circuit sensitivity @ 250 Hz (±3 dB)	dB re 1V/Pa	-48
Resonance frequency	kHz	100
Microphone cartridge capacitance, typ.	pF	5
Microphone venting		Front
Temperature range, operation	°C / °F	-40 to 120 / -40 to 248
IEC 61094-4 Designation		WS2F
Temperature range, storage	°C / °F	-40 to 85 / -40 to 185
Temperature coefficient @250 Hz	dB/°C / dB/°F	-0.01 / -0.006
Humidity range non condensing	% RH	0 to 90
Static pressure coefficient @250 Hz	dB/kPa	-0.013
Humidity coefficient @250 Hz	dB/% RH	-0.001
Influence of axial vibration @1 m/s²	dB re 20 µPa	60
CE/RoHS compliant/WEEE registered		Yes / Yes, Yes
Weight	g / oz	6 / 0.21

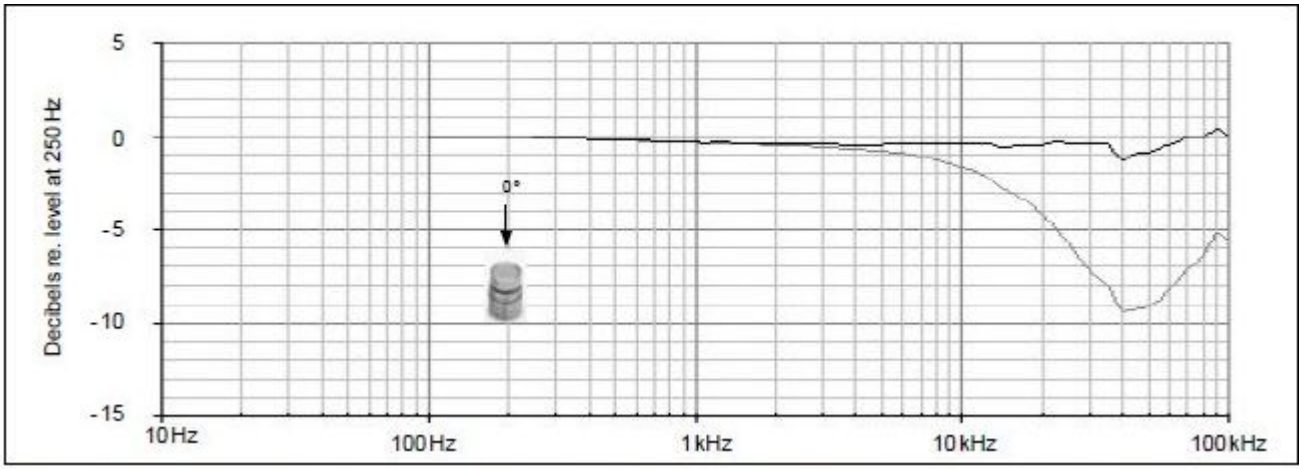

Typical frequency response (without protection grid). Upper curve shows free-field response for 0°, lower curve shows pressure response.

GRAS Sound & Vibration reserves the right to change specifications and accessories without notice.

Dimensions

Dimensions in mm

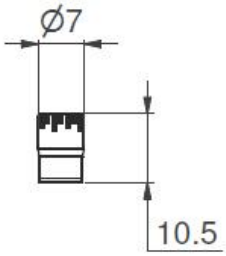

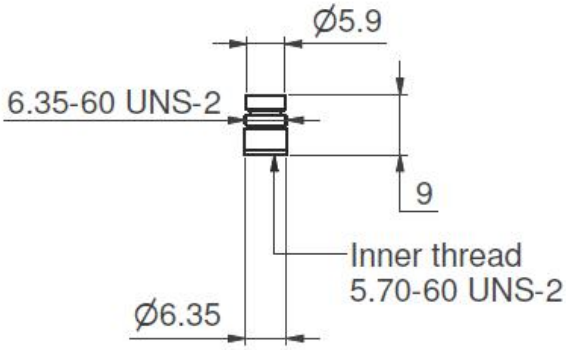

GRAS Worldwide

Subsidiaries and distributors in more than 40 countries

HEAD OFFICE, DENMARK
GRAS SOUND & VIBRATION
Skovlytoften 33
2840 Holte
Denmark
Tel: +45 4566 4046
www.GRASacoustics.com
gras@grasacoustics.com

USA
GRAS SOUND & VIBRATION
9290 SW Nimbus Avenue
Beaverton, OR 97008
Tel: 503-627-0832
Toll Free: 800-231-7350
www.GRASacoustics.com
sales-usa@grasacoustics.com

UK
GRAS SOUND & VIBRATION
Unit 115, Gibson House,
Ermine Business Park, Huntingdon,
Cambridgeshire, PE29 6XU
Tel: +44 (0)7762 584 202
www.GRASacoustics.com
sales-uk@grasacoustics.com

CHINA
GRAS SOUND & VIBRATION
Room 502, Building T1,
No.1398 Ali Center
Shenchang Road,
Minhang District,
Shanghai, China, 201107
Tel: +86 21 400-888-9826
www.GRASacoustics.cn
cnsales@grasacoustics.com

About GRAS Sound & Vibration

GRAS is a worldwide leader in the sound and vibration industry. We develop and manufacture state-of-the-art measurement microphones to industries where acoustic measuring accuracy and repeatability is of utmost importance in R&D, QA and production. This includes applications and solutions for customers within the fields of aerospace, automotive, audiology, and consumer electronics. GRAS microphones are designed to live up to the high quality, durability and accuracy that our customers have come to expect and trust.

GRAS Sound & Vibration is represented through subsidiaries and distributors in more than 40 countries and is part of Axiometrix Solutions, a leading test solutions provider comprised of globally recognized measurement brands. Read more at www.GRASacoustics.com

www.GRASacoustics.com

GRAS

An Axiometrix Solutions Brand