GRAS 50GI-RP

CCP Rugged Intensity Probe

Freq range: IEC 61043 Class 1
Dyn range: 27 dB(A) to 146 dB
Sensitivity: 12.5 mV/Pa

Type 50GI-RP is a sound intensity probe for direct connection to signal analyzers or data acqusition devices with IEPE inputs. The probe includes a pair of phase-matched prepolarized precision microphones which meet the requirements in IEC standard 61043 for a class-1 intensity probe..

GRAS Sound & Vibration
Skovlytoften 33, 2840 Holte, Denmark
www.grasacoustics.com

Typical applications and use

- Sound intensity measurements
- Sound source location
- Sound power measurements
- IEC 61043 standard measurements
- Sound source ranking
- Sound intensity mapping

Design

The probe set includes solid interchangeable spacers for microphone separations from 12 mm to 50 mm so that the probe can cover the frequency range from 100 Hz to 10 kHz.

All components are made specifically for sound intensity applications. Each small 1/4" diameter by 40 mm long microphone preamplifier is housed in a robust stainless steel casing. The probe head is symmetrical which enables reliable calibrations as described in the proposed standard (ISO/DIS 9614-2) for sound power measurements using sound intensity measurements.

The GRAS 50GI-RP CCP Intensity Probe is a two-microphone sound intensity probe especially designed for use in conditions calling for a rugged design. It is equipped with CCP transducers and a remote control handle for direct connection to an intensity analyzer. The remote-controlled intensity probe comprises a 40GK-S1 sound Intensity Microphone Pair, two 26CC CCP Microphone Preamplifiers, three solid spacers of various lengths, windscreen and a probe handle.

The 50GI-RP is delivered in a carrying case as a ready-to-use kit, complete with all the above accessories.

The microphones are 1/2" free-field prepolarized microphones with a uniquely-designed pressure equalisation system, which ensures extremely well defined phase characteristics.

The microphones and preamplifiers are mounted on a swivel head on the telescopic arm of the handle. To cover the frequency range from 100 Hz to 10 kHz, the 50GI-P probe is delivered with three solid spacers for spacing the microphones at 12 mm, 25 mm, and 50 mm. These spacers can be easily interchanged without dismantling the probe.

Polarization/Connection		0 V / CCP
Connector type		12-pin LEMO

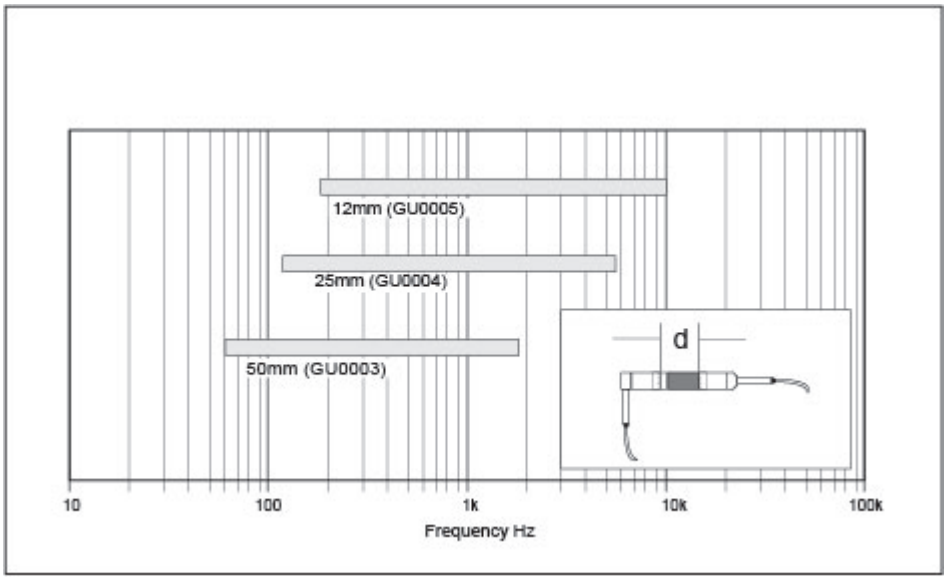

Frequency ranges for different microphone spacers

Dimensions in mm

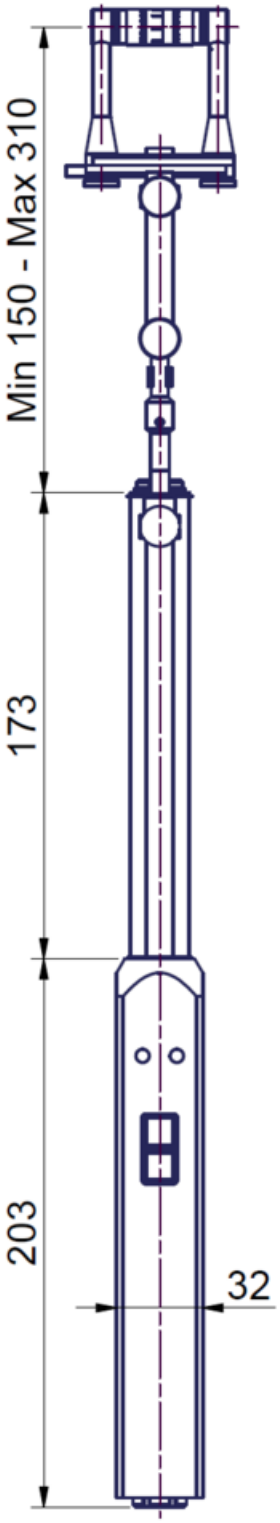
Min 150 - Max 310
173
203
32

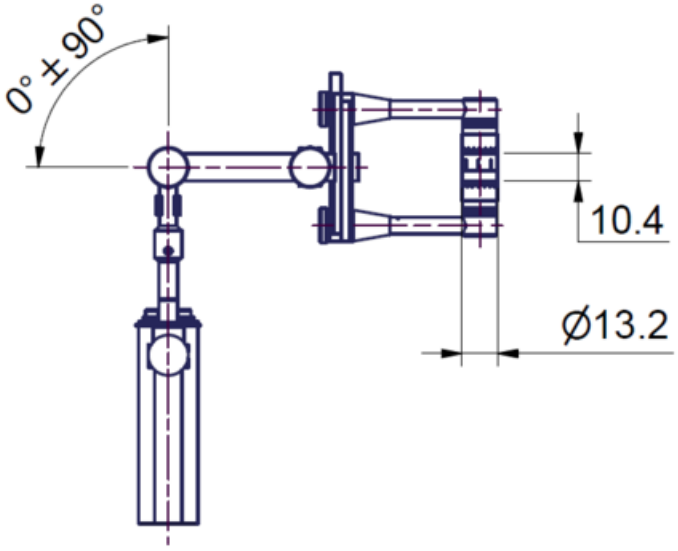
0° ± 90°
10.4
Ø13.2

GRAS Sound & Vibration reserves the right to change specifications and accessories without notice.

Ordering info

Included

GRAS RA0213	Rugged Probe Head
GRAS 40GK-S1	1/2"' Intensity Microphone Set
GRAS RA0001	Right-angled (90°) Adapter for 1/2" microphone and 1/4" preamplifier
GRAS GR0040	Holder for spacer
GRAS RA0264	Spacer, 50 mm
GRAS RA0265	Spacer, 25 mm
GRAS RA0266	Spacer, 12 mm
GRAS 26CC Set	1/4" CCP Preamplifier set
GRAS AA0021	5 m Extension Cable, 5 m, 12 pin LEMO male - male
GRAS AC0024	Adapter cable, 12-pin LEMO to D-sub + 2xBNC
GRAS KE0122	Serial (D-sub) to USB adapter
GRAS AI0048	Probe handle
GRAS AM0376	Windscreen

Optional

GRAS AA0010-S1	3 m LEMO 12-pin - Lemo 12-pin, Cable for Intensity Probe
GRAS AA0010	10 m LEMO 12-pin - Lemo 12-pin, Cable for Intensity Probe
GRAS 51AB	Intensity Calibrator
GRAS 42AP	Pistonphone with built-in barometerand thermometer (recommended)
GRAS 42AA	Pistonphone
GRAS RA0024	Two-port Calibration Coupler (for GRAS 42AP or 42AA Pistonphones)

GRAS Sound & Vibration reserves the right to change specifications and accessories without notice.

GRAS Worldwide

Subsidiaries and distributors in more than 40 countries

HEAD OFFICE, DENMARK
GRAS SOUND & VIBRATION
Skovlytoften 33
2840 Holte
Denmark
Tel: +45 4566 4046
www.GRASacoustics.com
gras@grasacoustics.com

USA
GRAS SOUND & VIBRATION
9290 SW Nimbus Avenue
Beaverton, OR 97008
Tel: 503-627-0832
Toll Free: 800-231-7350
www.GRASacoustics.com
sales-usa@grasacoustics.com

UK
GRAS SOUND & VIBRATION
Unit 115, Gibson House,
Ermine Business Park, Huntingdon,
Cambridgeshire, PE29 6XU
Tel: +44 (0)7762 584 202
www.GRASacoustics.com
sales-uk@grasacoustics.com

CHINA
GRAS SOUND & VIBRATION
Room 502, Building T1,
No.1398 Ali Center
Shenchang Road,
Minhang District,
Shanghai, China, 201107
Tel: +86 21 400-888-9826
www.GRASacoustics.cn
cnsales@grasacoustics.com

About GRAS Sound & Vibration

GRAS is a worldwide leader in the sound and vibration industry. We develop and manufacture state-of-the-art measurement microphones to industries where acoustic measuring accuracy and repeatability is of utmost importance in R&D, QA and production. This includes applications and solutions for customers within the fields of aerospace, automotive, audiology, and consumer electronics. GRAS microphones are designed to live up to the high quality, durability and accuracy that our customers have come to expect and trust.

GRAS Sound & Vibration is represented through subsidiaries and distributors in more than 40 countries and is part of Axiometrix Solutions, a leading test solutions provider comprised of globally recognized measurement brands. Read more at www.GRASacoustics.com

www.GRASacoustics.com

GRAS

An Axiometrix Solutions Brand