GRAS 50GI-R

CCP Intensity Probe with Remote Control

Freq range: IEC 61043 Class 1
Dyn range: 27 dB(A) to 146 dB
Sensitivity: 12.5 mV/pa

The 50GI-R is a sound intensity probe for direct connection to signal analyzers or data acquisition devices with IEPE inputs. The probe includes a pair of phase-matched prepolarized precision microphones which meet the requirements in IEC standard 61043 for a class-1 intensity probe. The small rugged ¼" CCP preamplifiers ensure minimum disturbances to the sound field for accurate measurements in the full frequency range.

GRAS Sound & Vibration
Skovlytoften 33, 2840 Holte, Denmark
www.grasacoustics.com

Typical Applications and Uses

- Sound intensity measurements
- Sound source location
- Sound power measurements
- IEC 61043 standard measurements
- Sound source ranking
- Sound intensity mapping

Design

The probe set includes solid interchangeable spacers for microphone separations from 12 mm to 100 mm so that the probe can cover the frequency range from 50 Hz to 10 kHz.

All components are made specifically for sound intensity applications. Each small ¼" diameter by 40 mm long microphone preamplifier is housed in a robust stainless steel casing, which enables novel probe designs for reducing disturbances to the soundfield otherwise brought about by the effects of shadows and diffraction, and a symmetry which enables reliable calibrations as described in the proposed standard (ISO/DIS 9614-2) for sound power measurements using sound intensity measurements.

The 50GI-R CCP Intensity Probe comprises a 40GK sound Intensity Microphone Pair, two 26CB CCP Microphone Preamplifiers, four solid spacers of various lengths, windscreen, and probe handle with remote control.

The 50GI-R is delivered in a carrying case as a ready-to-use kit, complete with all the above accessories. The microphones are ½" free-field prepolarized microphones with a uniquely-designed pressure equalization system which ensures extremely well defined phase characteristics.

The microphones and preamplifiers are mounted on a swivel head on the telescopic arm of the Remote control handle. To cover the full frequency range from 50 Hz to 10 kHz, the 50GI-R probe is delivered with four solid spacers for spacing the microphones at 12 mm, 25 mm, 50 mm and 100 mm. These spacers can be easily interchanged without dismantling the probe.

Dimensions in mm

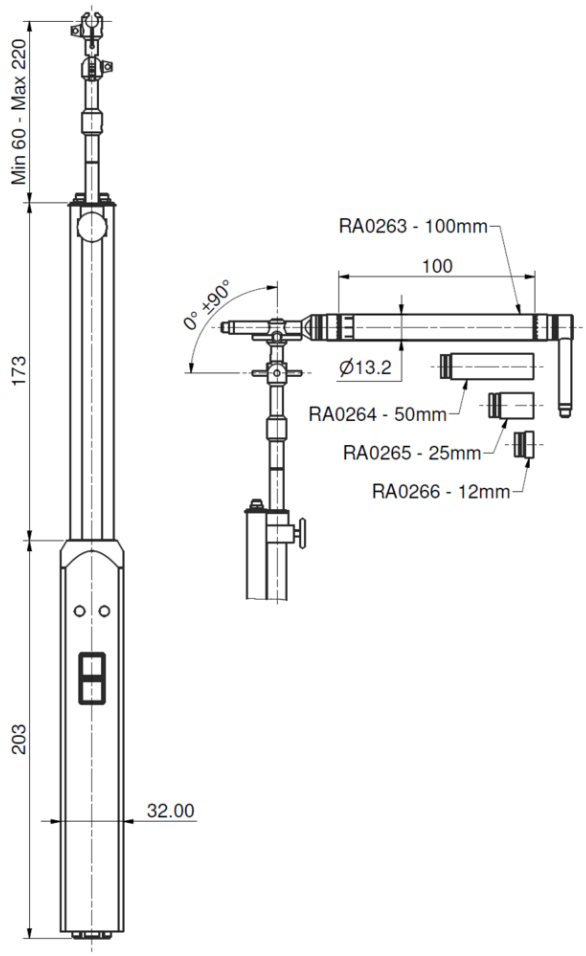

Specifications

Polarization/Connection		0 V / CCP
Frequency range (±2 dB)	Hz	IEC 61043 Class 1
Connector type		12-pin LEMO
Weight	g / oz	400 / 14.110

GRAS Sound & Vibration reserves the right to change specifications and accessories without notice.

Ordering info

Included

GRAS 40GK	Microphone set
GRAS 26CB Set	¼" CCP Preamplifier
	Spacers
GRAS RA0003	Adapter for 1/2" microphone and 1/4" preamplifier
GRAS RA0001	Right-angled (90°) Adapter for 1/2" microphone and 1/4" preamplifier
GRAS AA0021	5 m cable for Intensity Probe
GRAS AC0024	Adapter Cable for CCP Intensity Probe
GRAS AA0084	Cable, SMB-Microdot, 30 cm (male-male)
GRAS KE0132	Serial to USB Adapter
GRAS AI0048S	Probe handle
GRAS AI0001	Windscreen

Optional

GRAS 51AB	Phase Calibrator according to IEC 61043
GRAS 42AP	Intelligent Pistonphone, Class 0
GRAS RA0024	Coupler for two-port Calibration

GRAS Sound & Vibration reserves the right to change specifications and accessories without notice.

GRAS Worldwide

Subsidiaries and distributors in more than 40 countries

HEAD OFFICE, DENMARK
GRAS SOUND & VIBRATION
Skovlytoften 33
2840 Holte
Denmark
Tel: +45 4566 4046
www.GRASacoustics.com
gras@grasacoustics.com

USA
GRAS SOUND & VIBRATION
9290 SW Nimbus Avenue
Beaverton, OR 97008
Tel: 503-627-0832
Toll Free: 800-231-7350
www.GRASacoustics.com
sales-usa@grasacoustics.com

UK
GRAS SOUND & VIBRATION
Unit 115, Gibson House,
Ermine Business Park, Huntingdon,
Cambridgeshire, PE29 6XU
Tel: +44 (0)7762 584 202
www.GRASacoustics.com
sales-uk@grasacoustics.com

CHINA
GRAS SOUND & VIBRATION
Room 502, Building T1,
No.1398 Ali Center
Shenchang Road,
Minhang District,
Shanghai, China, 201107
Tel: +86 21 400-888-9826
www.GRASacoustics.cn
cnsales@grasacoustics.com

About GRAS Sound & Vibration

GRAS is a worldwide leader in the sound and vibration industry. We develop and manufacture state-of-the-art measurement microphones to industries where acoustic measuring accuracy and repeatability is of utmost importance in R&D, QA and production. This includes applications and solutions for customers within the fields of aerospace, automotive, audiology, and consumer electronics. GRAS microphones are designed to live up to the high quality, durability and accuracy that our customers have come to expect and trust.

GRAS Sound & Vibration is represented through subsidiaries and distributors in more than 40 countries and is part of Axiometrix Solutions, a leading test solutions provider comprised of globally recognized measurement brands. Read more at www.GRASacoustics.com

www.GRASacoustics.com

GRAS

An Axiometrix Solutions Brand