GRAS 48LX-1

UTP Microphone, Medium Pressure

Freq range: 20 Hz to 31.5 kHz (±1 dB)
10 Hz to 50 kHz (±3 dB)
Dyn range: 54 dB(A) to 170 dB
Sensitivity: 0.6 mV/Pa (±3 dB)
Use: For aeroacoustic measurements

48LX-1 is an Ultra-thin Precision (UTP) surface microphone for aeroacoustic testing.
It is a low-profile ¼ CCP medium-pressure condenser microphone. The microphone is only 1 mm high and can, therefore, be mounted in air flow without disturbing the sound field.

GRAS Sound & Vibration
Skovlytoften 33, 2840 Holte, Denmark
www.grasacoustics.com

Ultra-thin Precision Surface Microphone

48LX-1 is an Ultra-thin Precision (UTP) surface microphone set for aeroacoustic testing.

It is a ¼ CCP medium-pressure condenser microphone set with a height of 1 mm.

The microphone set includes a preamplifier with TEDS.

The integrated cable connector is Microdot female. The total cable length is 3 m.

Typical applications and use

48LX-1 is for low- to medium-level surface pressure measurements on planar and curved surfaces. Because of its low profile, it is ideal for measurements in boundary layers and turbulence, e.g., in:

- Wind-induced noise measurement on vehicles
- Wind-tunnel testing
- Measurements in confined spaces

Mounting

48LX-1 can be mounted using the RA4810 Hard Fairing for 48LA/48LX-1, with click mount, and the included double-sided adhesive mounting pad. The fairing has a locking mechanism that makes it possible to install and remove the microphone without removing the fairing. The fairing has an angle of 7.5 degrees.

Field Verification

For sensitivity verification in the field using a sound calibrator, a special adapter is available, the RA4800 Adapter for Sensitivity Verification of flush/surface microphones. RA4800 is furnished with a round, soft pad similar to those used on over-the-ear headphones. This pad ensures a sealed cavity for the calibration signal. Read more here.

With this adapter, quick and convenient in situ sensitivity verification is possible, and therefore, it is possible to check the integrity of the measurement setup immediately before measurements.

Calibration

Accessories for sensitivity and frequency calibration are available.

For sensitivity calibration, the RA4801 Adapter for Sensitivity Calibration of 48LA/48LX-1 is available. This adapter is suitable for use with a pistonphone or sound calibrator fitted with a ½ coupler.

For frequency calibration, the RA4802 Actuator for Frequency Calibration of 48LA/48LX is available. RA4801 and RA4802 are also available as a set, the RA4805.

48LX-1 is checked and calibrated before leaving the factory. An individual calibration chart is supplied with each microphone and includes an individual pressure frequency response.

Quality and warranty

GRAS microphone sets are made of components from our proven standard portfolio and are all manufactured of high-quality material and branded parts, which were chosen and processed to ensure life-long stability and robustness.

All parts are manufactured and assembled at the factory in Denmark by skilled and dedicated operators in a verified clean-room environment.

The warranty period for the 48LX-1 microphones is two years.

The warranty covers defective materials, and workmanship for the sensor element, printed circuit board, and housing.

Cable and connectors are covered by a six-month warranty period.

Service

Should you by mistake damage or destroy your microphone, we offer an exchange service at a reasonable cost and short turn-around time.

GRAS Sound & Vibration continually strives to improve the quality of our products for our customers. Therefore, the specifications and accessories are subject to change.

Specifications

Frequency range (±1 dB)	Hz	20-31.5 k
Frequency range (±3 dB)	Hz	10-50 k
Dynamic range lower limit (microphone thermal noise)	dB(A)	54
Dynamic range upper limit	dB	170
Sensitivity @ 250 Hz (±3 dB)	dB re 1V/Pa	-64.4
Sensitivity @ 250 Hz (±3 dB)	mV/Pa	0.6
Output impedance	Ω	<50
Power supply min. to max.	mA	2 - 10
Microphone venting		Front
Temperature range, operation	°C / °F	-20 to 85 / -4 to 185
Temperature range, storage	°C / °F	-40 to 85 / -40 to 185
Temperature coefficient @250 Hz	dB/°C / dB/°F	-0.03, Typical
Static pressure coefficient @250 Hz	dB/kPa	-0.0003
Humidity range non condensing	% RH	0 to 80
Humidity coefficient @250 Hz	dB/% RH	-0.01
Influence of axial vibration @1 m/s²	dB re 20 µPa	73
TEDS UDID (IEEE 1451.4)		I27-0-0-0U
Weight	g / oz	1 / 0.035 (excl. cable); 18 / 0.63 (incl. cable)

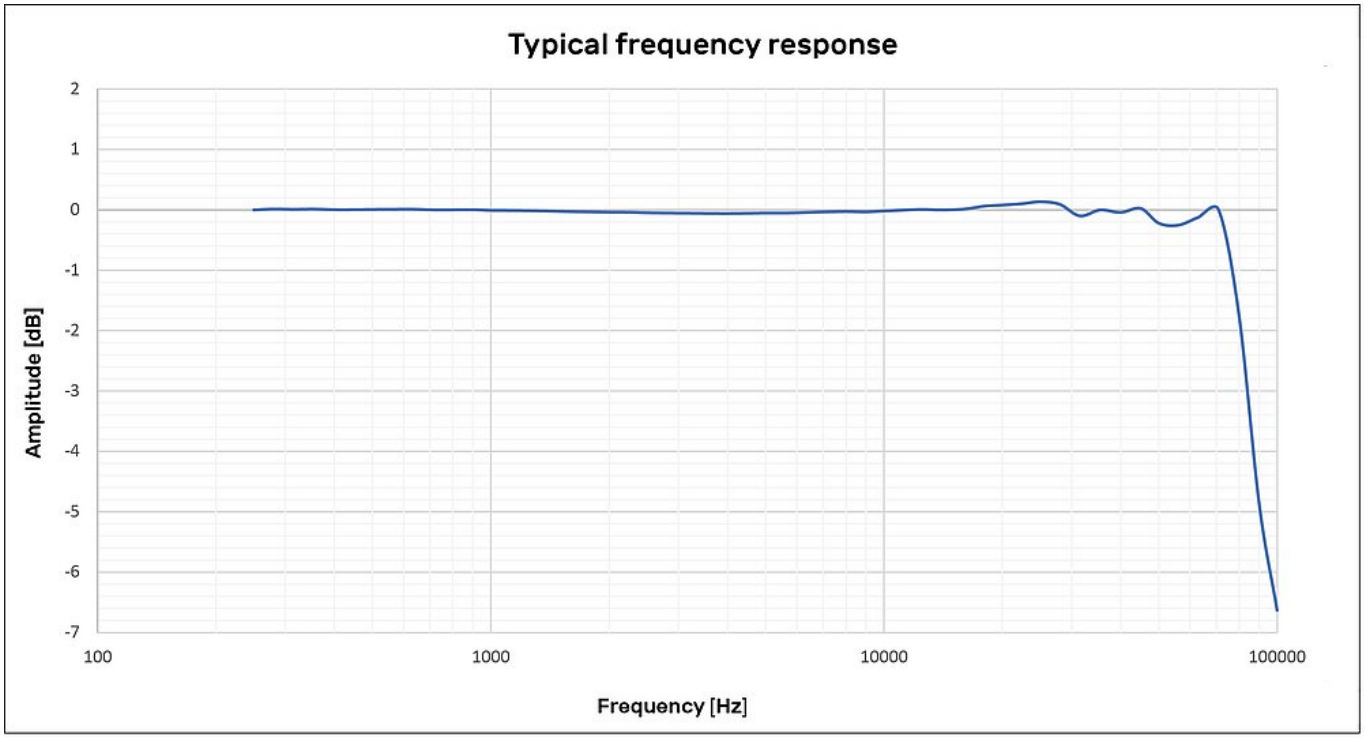

The frequency response is within ±3 dB up to 70 kHz

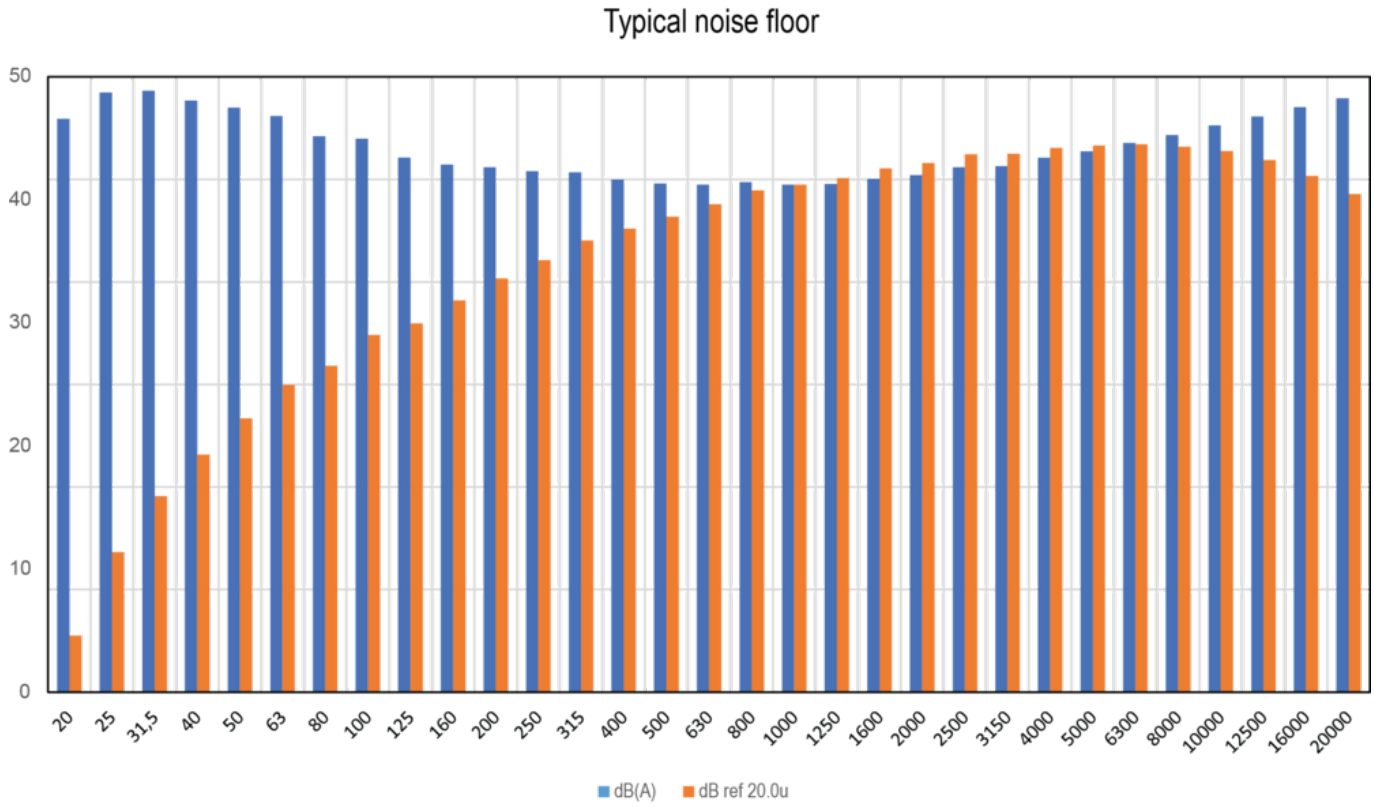

Dimensions

All dimensions in mm

48LA/LX-1

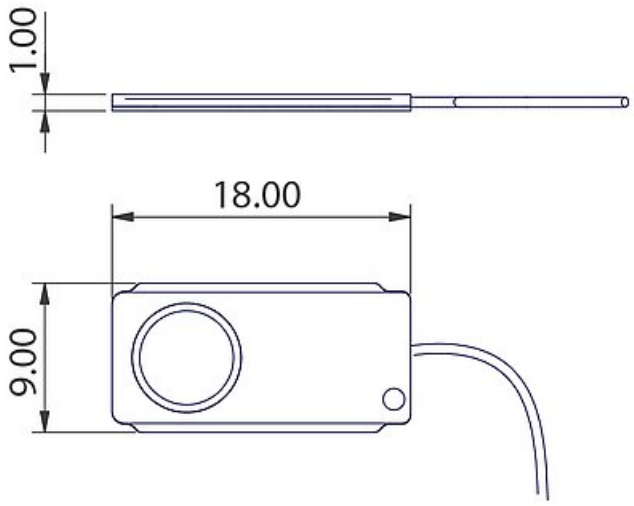

Fairing

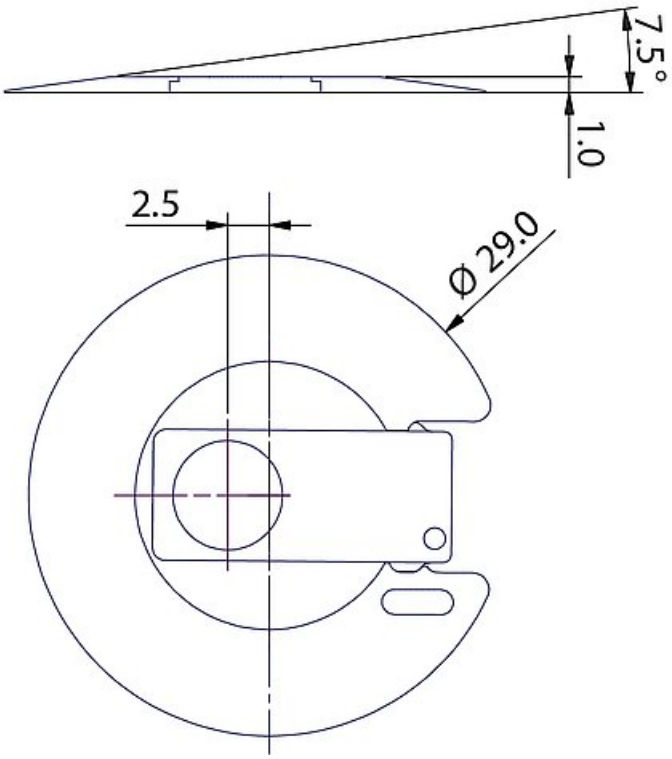

Ordering info

Included items

GRAS 48LX-1	UTP Microphone, Medium Pressure, with 3 m cable and booster
GRAS RA4810	Hard Fairing for 48LA/48LX-1, with click mount, double-sided self-adhesive mounting pad included x1

Optional items

GRAS RA4800	Adapter for Sensitivity Verification of Flush/Surface Microphones
GRAS RA4801	Adapter for Sensitivity Calibration of 48LA/48LX-1
GRAS RA4802	Actuator for Frequency Calibration of 48LA/48LX-1
GRAS RA4805	Actuator and Pistonphone Adapter Kit for 48LA/48LX-1. This kit includes RA4801 and RA4802.
GRAS RA4810-2	Hard Fairing for 48LA/48LX-1, with click mount, 10-pack, mounting pads are included
GRAS RA4810-10	Hard Fairing for 48LA/48LX-1, with click mount, 50-pack, mounting pads are included
GRAS RA4811	Soft Fairing Mounting Kit for UTP Microphone Sets
GRAS RA4811-2	Soft Fairing Mounting Kit for UTP Microphone Sets, 10 pcs
GRAS RA4812	DB0521 Mounting overlay tape for UTP fairings (1 pc.)
GRAS RA4812-2	DB0521 Mounting overlay tape for UTP fairings (10 pcs.)
GRAS AE0101	Microdot Male - BNC Male Adapter
GRAS AA0070	Microdot - BNC Cable, 3 m
GRAS AA0071	Microdot - BNC Cable, 5 m
GRAS AA0072	Microdot - BNC Cable, 10 m

GRAS Worldwide

Subsidiaries and distributors in more than 40 countries

HEAD OFFICE, DENMARK
GRAS SOUND & VIBRATION
Skovlytoften 33
2840 Holte
Denmark
Tel: +45 4566 4046
www.GRASacoustics.com
gras@grasacoustics.com

USA
GRAS SOUND & VIBRATION
9290 SW Nimbus Avenue
Beaverton, OR 97008
Tel: 503-627-0832
Toll Free: 800-231-7350
www.GRASacoustics.com
sales-usa@grasacoustics.com

UK
GRAS SOUND & VIBRATION
Unit 115, Gibson House,
Ermine Business Park, Huntingdon,
Cambridgeshire, PE29 6XU
Tel: +44 (0)7762 584 202
www.GRASacoustics.com
sales-uk@grasacoustics.com

CHINA
GRAS SOUND & VIBRATION
Room 502, Building T1,
No.1398 Ali Center
Shenchang Road,
Minhang District,
Shanghai, China, 201107
Tel: +86 21 400-888-9826
www.GRASacoustics.cn
cnsales@grasacoustics.com

About GRAS Sound & Vibration

GRAS is a worldwide leader in the sound and vibration industry. We develop and manufacture state-of-the-art measurement microphones to industries where acoustic measuring accuracy and repeatability is of utmost importance in R&D, QA and production. This includes applications and solutions for customers within the fields of aerospace, automotive, audiology, and consumer electronics. GRAS microphones are designed to live up to the high quality, durability and accuracy that our customers have come to expect and trust.

GRAS Sound & Vibration is represented through subsidiaries and distributors in more than 40 countries and is part of Axiometrix Solutions, a leading test solutions provider comprised of globally recognized measurement brands. Read more at www.GRASacoustics.com

www.GRASacoustics.com

GRAS

An Axiometrix Solutions Brand