GRAS 47HC

1/2'' CCP Low-noise Microphone System

Freq range: 10 Hz to 20 kHz
Dyn range: 6.0 dB(A) to 100 dB SPL (20 Hz - 8 kHz)
6.0 dB(A) to 85 dB SPL (8 kHz - 20 kHz)
Sensitivity: 400 mV/Pa

The GRAS 47HC 1/2" Low-noise Microphone System measures sound pressure levels down to close to the threshold of human hearing. It is thus generally suitable for sound-power measurements on even very quiet products. Its very wide dynamic range permits measurements down to below 6.0 dB re. 20 µPa (in 1/3-octave bands).

GRAS Sound & Vibration
Skovlytoften 33, 2840 Holte, Denmark
www.grasacoustics.com

Introduction

Low noise emission becomes increasingly important for all kinds of machines, equipment and consumer products, and quiet products are often preferred over more noisy ones. It therefore becomes increasingly important to develop quiet products, and for this measurements close to the threshold of human hearing are needed.

A standard 1/2" microphone with high sensitivity (50 mV) has a noise floor about 16 dB(A), and the useful measurement range therefore begins at about 19 dB(A). To measure below this level, a special low-noise system is needed.

The 47HC is a prepolarized low-noise microphone set which builds on GRAS' more than 20 years' of experience with state of the art low-noise measurement microphone systems. With this set, the performance previously reserved for externally polarized setups is now available for CCP powered systems.

With a sensitivity of 400 mV/pa and a noise floor at 6.0 dB(A) or lower, it opens up for measurement levels down to about 10 dB(A). Its upper dynamic limit is 100 dB below 8 kHz, 85dB from 8 kHz to 20 kHz.

The microphone set has the same form factor as standard GRAS 1/2" microphone sets, and therefore it can be used with standard mounting accessories.

The 47HC is delivered with Generation II TEDS. The calibration data is programmed into the built-in TEDS according to IEEE 1451.4 using UDID I27-0-0-0U. If your measurement platform supports Transducer Electronic Data Sheets you will be able to read and write data like properties and calibration data.

Generation II TEDS chip (DS2431) may require updated system software.

Typical applications and use

- Measurements at very low sound pressure levels
- Sound-power measurements at low levels
- Measurements in quiet rooms and anechoic rooms
- Measurements on, for example, hard-disk drives, computer products, fans, electric cars, fluorescent lamps and other quiet products

Design

The 47HC comprises a special high-sensitive 1/2" free-field measurement microphone and an integrated 1/2" low-noise preamplifier. In combination, they connect to high-quality CCP input modules with BNC connector.

Preamplifier

The preamplifier is a special 1/2" amplifier with BNC connector optimized for low-noise. It provides amplification and has a built-in compensation filter that ensures linear free-field response up to the upper limit at 20 kHz.

Microphone

The 1/2" microphone is a pre-polarized free field microphone with a specially reduced inherent noise floor in order to achieve a large dynamic range and a wide frequency response. Its diaphragm is specially tuned for high sensitivity coupled with low internal noise.

Compatibility

The microphone set has the same form factor as a standard GRAS microphone set, and therefore it can be used with the standard mounting accessories available for GRAS standard microphone sets. It has the same dimensions as the 46AE, an advantage if it

shall be mounted in a GRAS hemisphere.

Calibration

For level calibration you need a 42AG Multifunction Sound Calibrator which can generate a signal of 94 dB re. 20 µPa.

The level normally used for sound level calibration (114 dB) will overload the 47HC and therefore the lower level is needed.

For frequency calibration you must send the set for calibration at GRAS.

See the tab Ordering info.

Specifications

Polarization/Connection		0 V / CCP
Frequency range (±1 dB)	Hz	12.5 to 10k
Frequency range (±2 dB)	Hz	10 to 16k
Frequency range (±3 dB)	Hz	6 to 20k
Dynamic range lower limit (microphone thermal noise)	dB(A)	6.0
Dynamic range upper limit	dB	100
Set sensitivity @ 250 Hz (±2 dB)	mV/Pa	400
Polarization voltage	V	0 V
Power supply (Constant Current Power)	mA	4-20
Microphone venting		Rear
Output impedance	Ω	47
Temperature range, operation	°C / °F	-10 to 60 / 14 to 140
Temperature range, storage	°C / °F	-40 to 85 / -40 to 185
Temperature coefficient @250 Hz	dB/°C / dB/°F	-0.01 / -0.006
Static pressure coefficient @250 Hz	dB/kPa	-0.01
Humidity range non condensing	% RH	0 to 95
Humidity coefficient @250 Hz	dB/% RH	0,001
Influence of axial vibration @1 m/s²	dB re 20 µPa	63
Connector type		BNC
CE/RoHS compliant/WEEE registered		Yes / Yes / Yes

GRAS Sound & Vibration reserves the right to change specifications and accessories without notice.

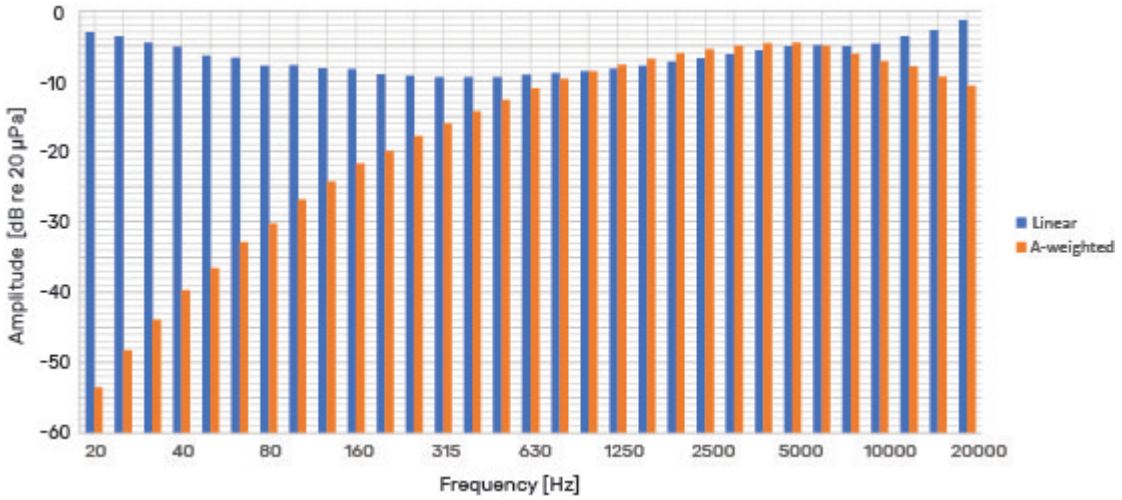

Typical noise floor shown in 1/3-octave bands - linear and A-weighted

Dimensions

Dimensions in mm

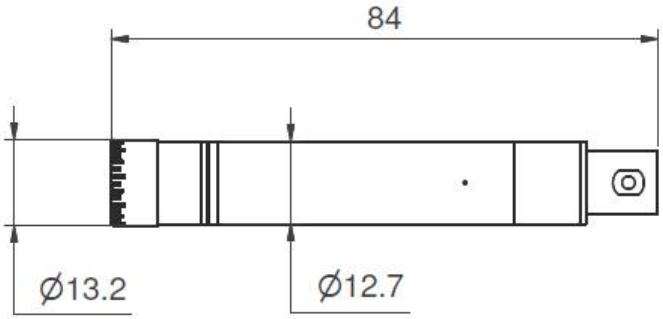

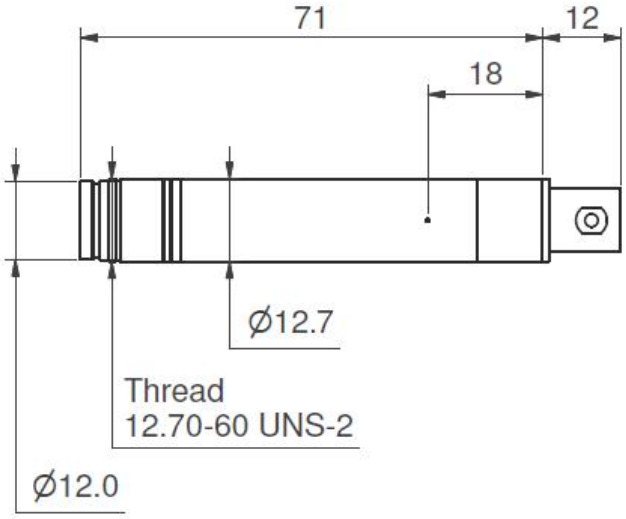

Optional items

GRAS AA0035	3 m BNC - BNC Cable
GRAS AL0006	Tripod
GRAS RA0093	Adjustable, high quality, stainless steel tripod adapter
GRAS AM0069	Windscreen for 1/2" Microphones
GRAS 12AQ	2-Channel Universal Power Module with signal conditioning and PC interface
GRAS 12AX	12AX 4-Channel CCP Power Module with Gain
GRAS 42AP	Intelligent Pistonphone, Class 0
GRAS 42AA	Pistonphone, Class 1
GRAS RA0090	94 dB Pistonphone Coupler

GRAS Sound & Vibration reserves the right to change specifications and accessories without notice.

GRAS Worldwide

Subsidiaries and distributors in more than 40 countries

HEAD OFFICE, DENMARK
GRAS SOUND & VIBRATION
Skovlytoften 33
2840 Holte
Denmark
Tel: +45 4566 4046
www.GRASacoustics.com
gras@grasacoustics.com

USA
GRAS SOUND & VIBRATION
9290 SW Nimbus Avenue
Beaverton, OR 97008
Tel: 503-627-0832
Toll Free: 800-231-7350
www.GRASacoustics.com
sales-usa@grasacoustics.com

UK
GRAS SOUND & VIBRATION
Unit 115, Gibson House,
Ermine Business Park, Huntingdon,
Cambridgeshire, PE29 6XU
Tel: +44 (0)7762 584 202
www.GRASacoustics.com
sales-uk@grasacoustics.com

CHINA
GRAS SOUND & VIBRATION
Room 502, Building T1,
No.1398 Ali Center
Shenchang Road,
Minhang District,
Shanghai, China, 201107
Tel: +86 21 400-888-9826
www.GRASacoustics.cn
cnsales@grasacoustics.com

About GRAS Sound & Vibration

GRAS is a worldwide leader in the sound and vibration industry. We develop and manufacture state-of-the-art measurement microphones to industries where acoustic measuring accuracy and repeatability is of utmost importance in R&D, QA and production. This includes applications and solutions for customers within the fields of aerospace, automotive, audiology, and consumer electronics. GRAS microphones are designed to live up to the high quality, durability and accuracy that our customers have come to expect and trust.

GRAS Sound & Vibration is represented through subsidiaries and distributors in more than 40 countries and is part of Axiometrix Solutions, a leading test solutions provider comprised of globally recognized measurement brands. Read more at www.GRASacoustics.com

www.GRASacoustics.com

GRAS

An Axiometrix Solutions Brand