GRAS 47BG-FV

1/4" CCP Miniature Flush-mount Microphone set, High Pressure

Freq range: 3.15 Hz to 60 kHz
Dyn range: 60 dB(A) to 184 dB
Sensitivity: 0.23 mV/Pa

The GRAS 47BG-FV is a front-vented ¼ CCP pressure microphone set for measuring very high sound pressure levels using flush mounting and where mounting space is limited or restrictive.
The RA0536 flush mounting kit for the 47BG-FV, also shown in the pictures section of this website, must be purchased separately. This kit includes a non-conductive mounting block, an O-ring, and four mounting screws.

GRAS Sound & Vibration
Skovlytoften 33, 2840 Holte, Denmark
www.grasacoustics.com

GRAS 47BG-FV

47BG-FV is a specialized version of the GRAS 46BG-FV ¼ CCP Pressure Standard Microphone Set, High Pressure. The 47BG-FV is optimized for acoustic measurements of a sound source at a boundary or wall; in which case the microphone forms part of the wall and measures the sound pressure on the wall itself.

The 47GB-FV has been specifically designed for use in scenarios where flush mounting is required. GRAS 47BGFV can be used in any flush-mounting setup, but it has several design elements that make it the perfect microphone for mounting where the distance between microphones must be very small or the cavity behind the measurement wall provides very little space for microphones and cabling.

Design

The unique design of the microphone set and mounting system is a necessarily robust set based around ensuring accurate measurements in very space-limited flush-mounting locations in extremely high-pressure areas.

Space-saving footprint—the 47BG-FV is not round like other flush-mounted microphones. The sides of the microphone have been flattened in order to provide the closest placement possible between microphones.

Adjustable cable orientation—in order to keep the microphone-mounting plate as flat as possible, the cable leaves the microphone set on the horizontal plane like other flush-mounted microphones; however, to ensure that the cables are never in the way when trying to place the microphone or connect the cable, the 47BG-FV cabling can be rotated 90° without needing to adjust the mounting plate.

Microphone

The microphone cartridge is the high-quality IEC 61094 WS3P standardized GRAS 40BG-FV ¼ Prepolarized Pressure Microphone, designed for long-term reliability in multiple environments.

Preamplifier

The preamplifier, 26CM ¼" CCP Miniature Flush-mount Preamplifier, is integrated into the set and specifically designed with a space-saving footprint, includes TEDS, and is based on our well-known circuit board substrates. In the industry, these are famous for their low self-noise, wide frequency, and excellent slew rate performance.

Mounting plate

The mounting plate is designed to match the microphone and is available in a standard thickness, or it can be ordered in a customized thickness to match the thickness of the structure wall. Alternatively, the specifications for 3D printing the mount in-house can be ordered.

Reduced footprint—the mounting plate footprint matches the microphone such that microphones can be placed very close together.

Vibration resistance—the plate and microphone are also highly resistant to vibration. The plate can be glued into place and the microphone is then snugly fixed to the mounting plate with bolts. This produces a solid, vibration-resistant connection to the mounting structure.

In situ calibration

A unique feature of 47BG-FV is that it can be calibrated in place using GRAS RA4800 Adapter for Sensitivity Verification of Flush/Surface Microphones.

Compatibility

To perform as specified the GRAS 47BG-FV microphone set requires a constant current input module that can deliver 4 mA and 24 V unloaded CCP voltage supply. If the constant current supply is lower, the capability of driving long cables is reduced, and consequently, the upper frequency is reduced. If the voltage supply is lower it will influence the upper dynamic range.

The microphone set is terminated with a 10/32 Microdot female connector. Ready-to-use coax cable assemblies of various types and lengths are available in standard as well as customized lengths.

TEDS

The 47BG-FV is IEEE 1451.4 TEDS v. 1.0 compliant. If your measurement platform supports Transducer Electronic Data Sheets you will be able to read and write data like properties and calibration data.

Calibration

When leaving the factory, all GRAS microphones have been calibrated in a controlled laboratory environment using traceable calibration equipment. Depending on the use, measurement environment, and internal quality control programs we recommend that the microphone is recalibrated at least once a year.

We offer two kinds of calibration as an optional after-sales service: GRAS Traceable Calibration and GRAS Accredited Calibration.

GRAS Traceable Calibration is a traceable calibration performed by trained personnel under controlled conditions according to established procedures and standards. This is identical to the rigorous calibration that all GRAS microphones are subjected to as an integral part of our quality assurance.

GRAS Accredited Calibration is performed by the GRAS Accredited Calibration Laboratory that has been accredited in accordance with ISO 17025 by DANAK, the Danish Accreditation Fund.

If you want a new microphone set delivered with an accredited calibration instead of the default factory calibration, specify this when ordering.

Learn more at gras/calib.

Quality and warranty

All GRAS microphones are made of high-quality materials that will ensure life-long stability and robustness. The microphones are all assembled in verified clean-room environments by skilled and dedicated operators with many years of expertise in this field.

The microphone diaphragm, body, and improved protection grid are made of high-grade stainless steel, which makes the microphone resistant to physical damage, as well as corrosion caused by aggressive air or gasses.

This, combined with the reinforced gold-plated microphone terminal which guarantees a highly reliable connection, enables GRAS to offer a five-year warranty against defective materials and workmanship.

Service

If you accidentally damage the diaphragm on a GRAS microphone, we can—in most cases—replace it at a very reasonable cost and with a short turnaround time. This not only protects your investment but also pleases your quality assurance department because you don't have to worry about new serial numbers, etc.

Specifications

Polarization/Connection		0 V / CCP
Frequency range (±2 dB)	Hz	3.15 - 60k
Set sensitivity @ 250 Hz (±4 dB)	dB re 1V/Pa	60
Sensitivity @ 250 Hz (±2 dB)	mV/Pa	0.23
Set sensitivity @ 250 Hz (±2 dB)	dB re 1V/Pa	- 72
Dynamic range upper limit	dB	184
Power supply min. to max.	mA	2 to 20
DC bias voltage, typ.	V	12
Output Voltage Swing, min. @ 24-28 V CCP voltage supply	Vp	8
Microphone venting		Front
Output impedance	Ω	<50
Temperature range, operation	°C / °F	-30 to 85 / -22 to 185
Temperature range, storage	°C / °F	-40 to 85 / -40 to 185
Temperature coefficient @250 Hz	dB/°C / dB/°F	-0.01 / -0.006
Static pressure coefficient @250 Hz	dB/kPa	-0.01
Humidity range non condensing	% RH	0 to 90
Humidity coefficient @250 Hz	dB/% RH	0.001
Influence of axial vibration @1 m/s²	dB re 20 µPa	63
TEDS (IEEE 1451.4)		27 v. 1.0
Connector type		Microdot 10/32
CE/RoHS compliant/WEEE registered		Yes/Yes/Yes

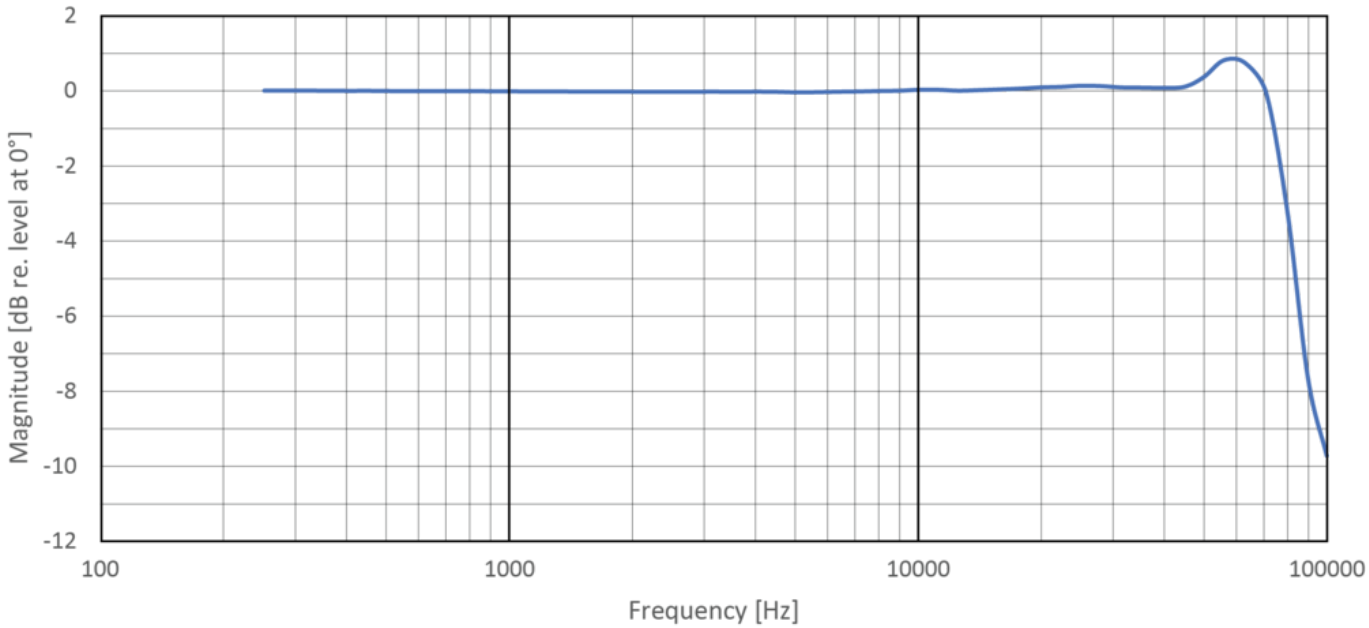

Typical pressure response

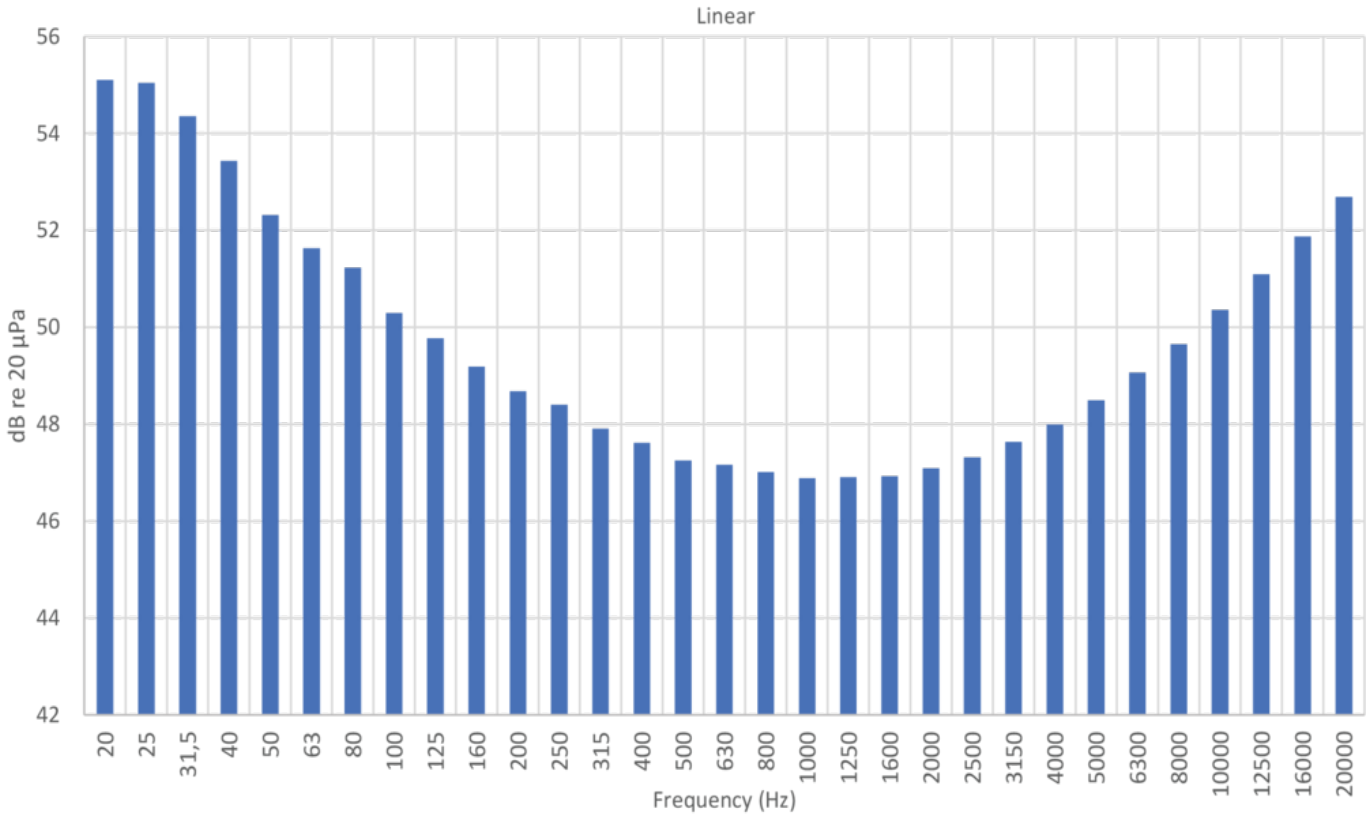

⅓-octave noise spectra, linear

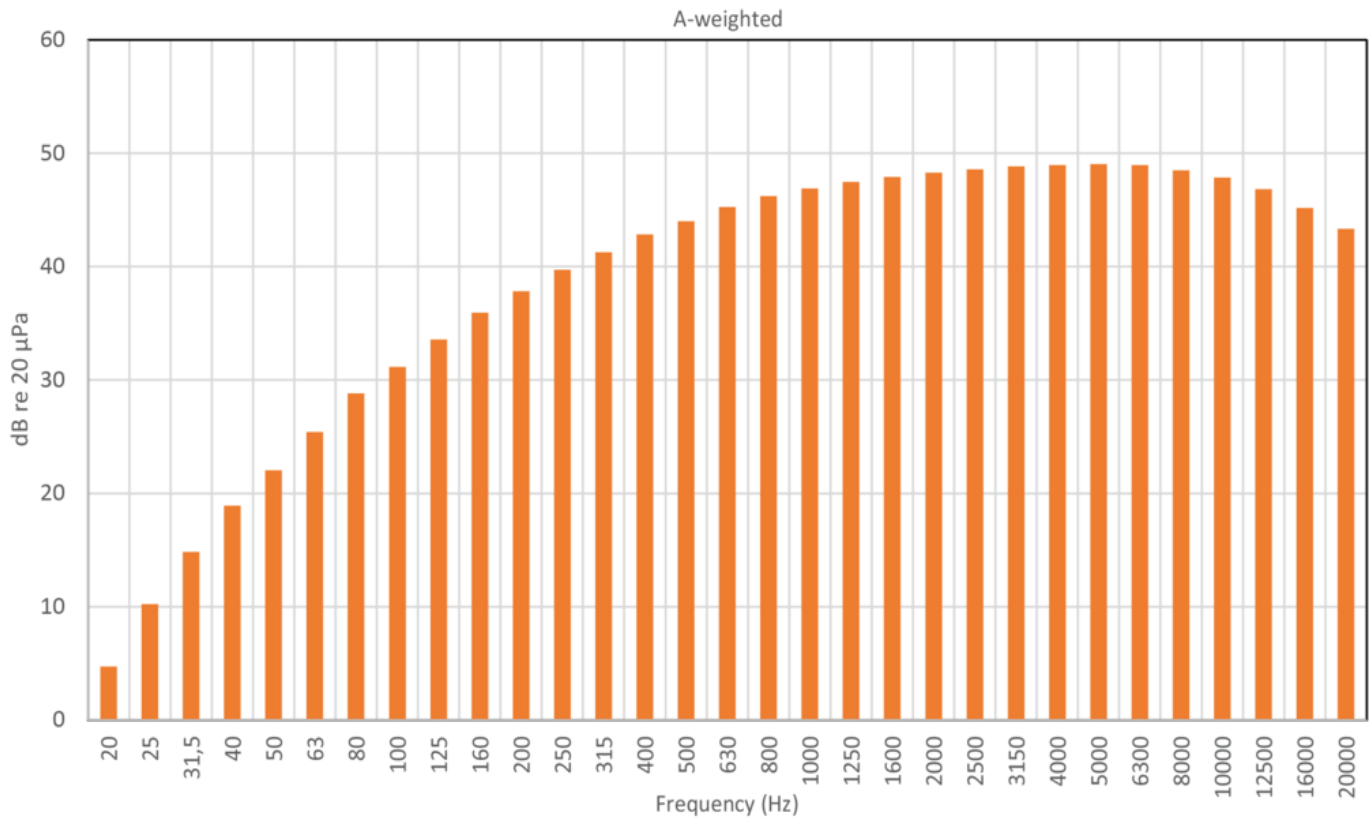

⅓-octave noise spectra, A-weighted

GRAS Sound & Vibration reserves the right to change specifications and accessories without notice.

Dimensions

Weight (g / oz)

8 / 0.282

Dimensions (mm):

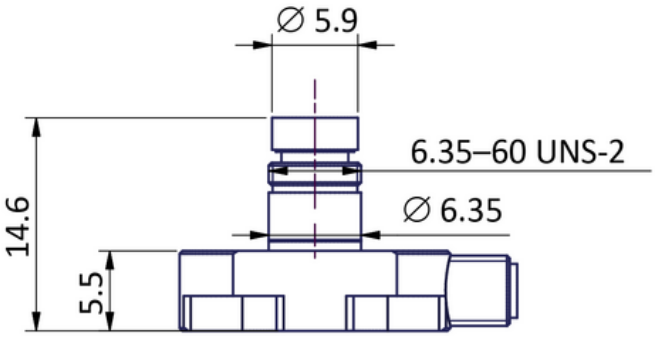

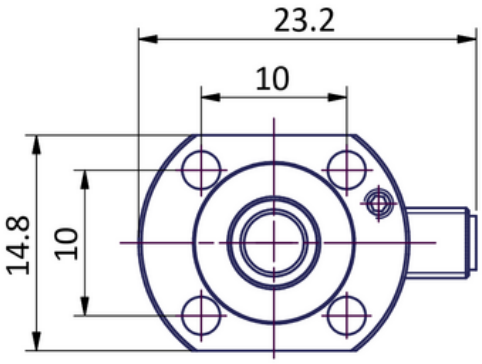

Optional items

GRAS AA0070	3 m Microdot - BNC Cable
GRAS AA0071	5 m Microdot - BNC Cable
GRAS AA0072	10 m Microdot - BNC Cable
GRAS RA0536	Mounting kit for 47BG-FV
GRAS RA4800	Adapter for Sensitivity Verification of Flush/Surface Microphones
GRAS 42AG	Multifunction Sound Calibrator, Class 1
GRAS 42AP	Intelligent Pistonphone, Class 0

GRAS Sound & Vibration reserves the right to change specifications and accessories without notice.

GRAS Worldwide

Subsidiaries and distributors in more than 40 countries

HEAD OFFICE, DENMARK
GRAS SOUND & VIBRATION
Skovlytoften 33
2840 Holte
Denmark
Tel: +45 4566 4046
www.GRASacoustics.com
gras@grasacoustics.com

USA
GRAS SOUND & VIBRATION
9290 SW Nimbus Avenue
Beaverton, OR 97008
Tel: 503-627-0832
Toll Free: 800-231-7350
www.GRASacoustics.com
sales-usa@grasacoustics.com

UK
GRAS SOUND & VIBRATION
Unit 115, Gibson House,
Ermine Business Park, Huntingdon,
Cambridgeshire, PE29 6XU
Tel: +44 (0)7762 584 202
www.GRASacoustics.com
sales-uk@grasacoustics.com

CHINA
GRAS SOUND & VIBRATION
Room 502, Building T1,
No.1398 Ali Center
Shenchang Road,
Minhang District,
Shanghai, China, 201107
Tel: +86 21 400-888-9826
www.GRASacoustics.cn
cnsales@grasacoustics.com

About GRAS Sound & Vibration

GRAS is a worldwide leader in the sound and vibration industry. We develop and manufacture state-of-the-art measurement microphones to industries where acoustic measuring accuracy and repeatability is of utmost importance in R&D, QA and production. This includes applications and solutions for customers within the fields of aerospace, automotive, audiology, and consumer electronics. GRAS microphones are designed to live up to the high quality, durability and accuracy that our customers have come to expect and trust.

GRAS Sound & Vibration is represented through subsidiaries and distributors in more than 40 countries and is part of Axiometrix Solutions, a leading test solutions provider comprised of globally recognized measurement brands. Read more at www.GRASacoustics.com

www.GRASacoustics.com

GRAS

An Axiometrix Solutions Brand