GRAS 40PL-10

CCP Free-field Array Microphone, High Pressure

Freq range: 10 Hz to 20 kHz
Dyn range: 33 dB(A) to 142 dB
Sensitivity: 9 mV/Pa

The GRAS 40PL-10 Array Microphone is a low-cost microphone for general purpose measurements in arrays and matrices. It has a wide useful frequency range reaching up to 20 kHz and a large dynamic range topping at 147 dB.

GRAS Sound & Vibration
Skovlytoften 33, 2840 Holte, Denmark
www.grasacoustics.com

Typical applications and use

- Multi-channel measurements
- Sound-field analyses
- Sound-power measurements
- Concurrent spatial and transient measurements

Design

Array microphones are designed to be mounted on large or small arrays. Such systems are typically used for measuring and locating noise sources, and here the phase match is important to get good accuracy in the measurements. An important characteristic of array microphones is that the microphones are phase-matched.

40PL-10 has a dynamic range from 33 dB(A) to 147 dB peak, the upper limit is the peak value before visible clipping

40PL-10 has an integrated CCP preamplifier and is delivered with a built-in TEDS chip which enables it to be programmed as a complete unit. The GRAS 40PL-10 requires a constant current power supply, e.g. the GRAS 12AL CCP Supply, or any other CCP compatible power supply.

Close manufacturing tolerances together with the advantages of the TEDS chip provide the GRAS 40PL-10 with a high degree of interchangeability; a major advantage when used in multiples forming arrays and matrices.

The low cost of the GRAS 40PL-10 is a key consideration when setting up measurements requiring a multiplicity of concurrent transient and spatial data.

Calibrating the GRAS 40PL-10 with a GRAS pistonphone (GRAS 42AP is recommended) is as straightforward as calibrating any other GRAS 1/4-inch microphone.

All GRAS microphones are individually checked and calibrated before leaving the factory. An individual calibration chart is supplied with each microphone.

Specifications

Polarization/Connection		0 V / CCP
Frequency range (±1.5 dB)	Hz	50 to 5 k
Frequency range (±2 dB)	Hz	10 to 20 k
Dynamic range lower limit (microphone thermal noise)	dB(A)	< 33
Dynamic range upper limit	dB	142
Set sensitivity @ 250 Hz (±2 dB)	mV/Pa	9
Power supply (Constant Current Power)	mA	2 to 20
Microphone venting		Front
Output impedance	Ω	< 50
Temperature range, operation	°C / °F	-10 to 50 / -50 to 122
Temperature range, storage	°C / °F	-20 to 60 / -4 to 140
Influence of axial vibration @1 m/s²	dB re 20 µPa	55
TEDS (IEEE 1451.4)		27 v. 1.0
Connector type		SMB
CE/RoHS compliant/WEEE registered		Yes / Yes / Yes
Weight	g / oz	5.5 / 0.2

Phase Match	
50Hz - 100Hz	±5˚
100Hz - 3kHz	±3˚
3kHz - 5kHz	±5˚
5kHz - 10kHz	±10˚

Frequency response

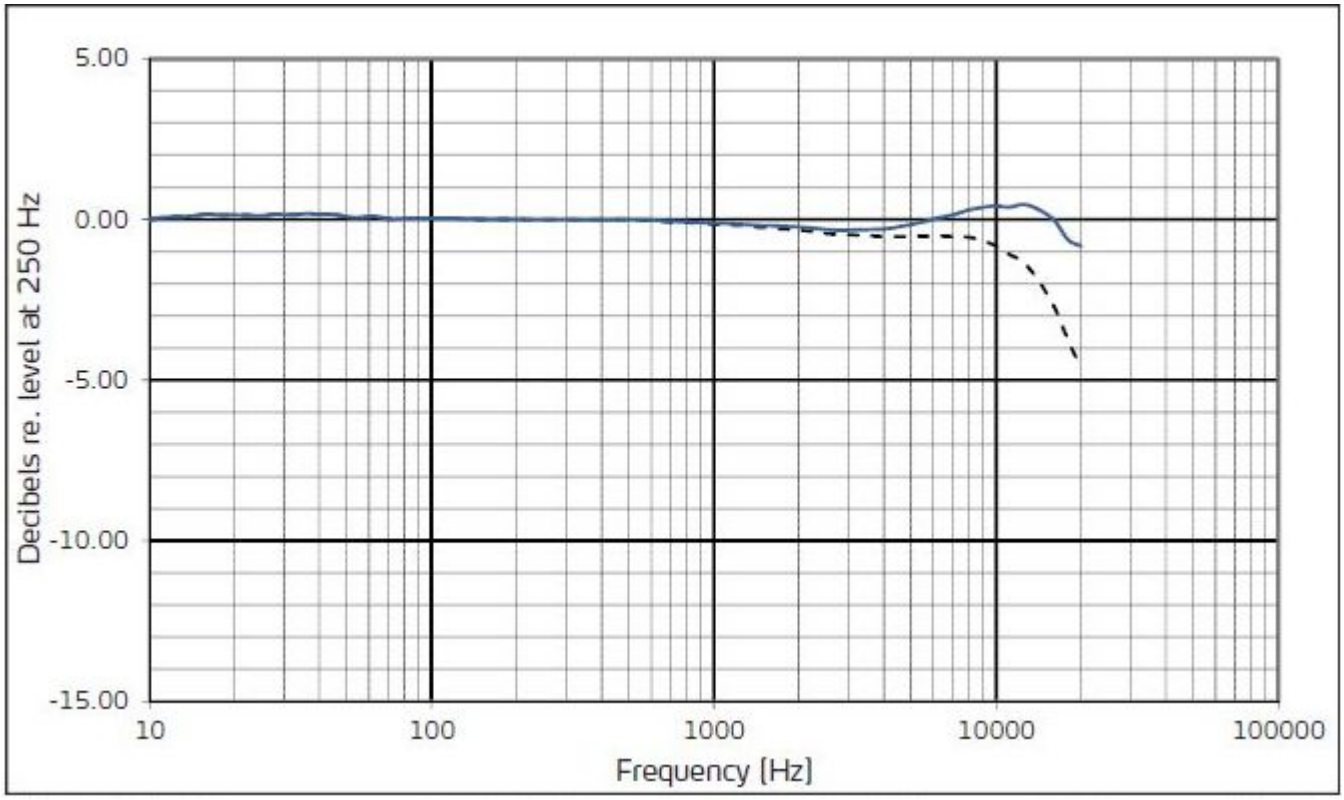

Typical frequency response

Free-field response

--- Pressure response

GRAS Sound & Vibration reserves the right to change specifications and accessories without notice.

Dimensions

Dimensions in mm

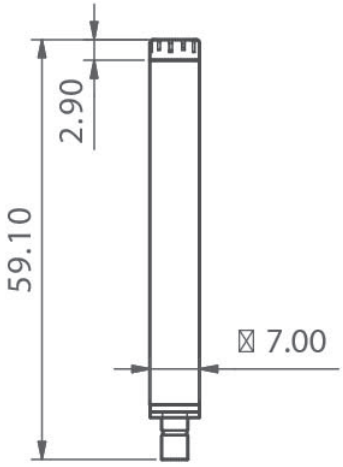

Optional items

GRAS AA0027	3 m SMB - BNC Cable
GRAS 12AL	1-Channel CCP Power Module with A-weighting filter
GRAS PR0002	Array Module
GRAS AM0364	Windscreens (set of 6)
GRAS RA0092	Rain-protection cap
GRAS 42AA	Pistonphone
GRAS 42AG	Multifunction Sound Calibrator, Class 1

GRAS Sound & Vibration reserves the right to change specifications and accessories without notice.

GRAS Worldwide

Subsidiaries and distributors in more than 40 countries

HEAD OFFICE, DENMARK
GRAS SOUND & VIBRATION
Skovlytoften 33
2840 Holte
Denmark
Tel: +45 4566 4046
www.GRASacoustics.com
gras@grasacoustics.com

USA
GRAS SOUND & VIBRATION
9290 SW Nimbus Avenue
Beaverton, OR 97008
Tel: 503-627-0832
Toll Free: 800-231-7350
www.GRASacoustics.com
sales-usa@grasacoustics.com

UK
GRAS SOUND & VIBRATION
Unit 115, Gibson House,
Ermine Business Park, Huntingdon,
Cambridgeshire, PE29 6XU
Tel: +44 (0)7762 584 202
www.GRASacoustics.com
sales-uk@grasacoustics.com

CHINA
GRAS SOUND & VIBRATION
Room 502, Building T1,
No.1398 Ali Center
Shenchang Road,
Minhang District,
Shanghai, China, 201107
Tel: +86 21 400-888-9826
www.GRASacoustics.cn
cnsales@grasacoustics.com

About GRAS Sound & Vibration

GRAS is a worldwide leader in the sound and vibration industry. We develop and manufacture state-of-the-art measurement microphones to industries where acoustic measuring accuracy and repeatability is of utmost importance in R&D, QA and production. This includes applications and solutions for customers within the fields of aerospace, automotive, audiology, and consumer electronics. GRAS microphones are designed to live up to the high quality, durability and accuracy that our customers have come to expect and trust.

GRAS Sound & Vibration is represented through subsidiaries and distributors in more than 40 countries and is part of Axiometrix Solutions, a leading test solutions provider comprised of globally recognized measurement brands. Read more at www.GRASacoustics.com

www.GRASacoustics.com

GRAS

An Axiometrix Solutions Brand