GRAS 26CG

1/4" CCP Preamplifier with Microdot Connector, Low Frequency

Freq range: 1 Hz - 200 kHz
Noise: 1.8 µV Gain: -0.35 dB
Special feature: For low-frequency applications

The GRAS 26CG ¼ CCP Preamplifier is a small robust unit optimised for acoustic measurements using condenser microphones. It has a very low inherent noise level, a wide dynamic range, and a wide frequency response from below 1 Hz to above 200 kHz.

GRAS Sound & Vibration
Skovlytoften 33, 2840 Holte, Denmark
www.grasacoustics.com

Typical Applications

- Infra-sound measurements
- Low-level measurements
- General-purpose preamplifier
- Use with 40AZ ½ Free-field Microphone, Low-frequency

Special Properties

- Wide Frequency Range
- Low Cut-off Frequency
- Low Noise Level

GRAS 26CG can easily be connected to any IEPE input or to a GRAS 12AQ or 12AL Power Supply.

The 26CG is delivered with a built-in TEDS chip and can be programmed as a combined unit with a microphone fitted. It can be used with all GRAS prepolarized microphones.

Design

All GRAS microphone preamplifiers are based on a small ceramic thick-film substrate with a very high input impedance. The ceramic substrate is shielded by a guard ring to minimise the influence of stray capacitance and microphonic interference.

The casing is made of stainless steel for maximum strength and durability. The small dimensions of this preamplifier ensure reliable operation under humid conditions owing to the heat generated by internal power dissipation.

Dynamic Range

The lower limit of the dynamic range is determined by the noise floor. The upper limit of the dymamic range is determined by the power module: Type 12AQ, sourced at 28 V DC, supplies a constant current of 4 mA. This leads to a maximum output voltage of 8 V_{peak}, the dynamic range thereby exceeding 126 dB.

Noise

The electrical circuit in the GRAS 26CG preamplifier is built on a ceramic substrate using selected low noise components to gain very low self-noise. The electrical self-noise is so low that system noise is mainly determined by the microphone cartridge's (GRAS 40AZ's) thermal noise.

Frequency Response

The low-frequency cut-off of the 26CG preamplifier is mainly determined by the input impedance of the preamplifier and the capacitance of the microphone cartridge. The capacities 20 pF,6.5 pF and 3 pF equal the typical capacitances of ½ , ¼ and ⅛ microphone cartridges respectively.

The high-frequency cut-off is determined by the preamplifier's ability to drive capacitive loads (slewrate), caused by the cable. For large-signals, the effects of these parameters must be accounted for when measurements are performed.

GRAS 26CG is typically used with GRAS 40AZ, low frequency microphone cartridge to reach a -3-dB cut-off frequency around 0.25 Hz.

Connectors and Adapters

26CG Preamplifier is provided with a Microdot connector. An adaptor (GR0010) for GRAS 1/2" microphones is included.

Specifications

Frequency range (±0.2 dB) with 18 pF microphone dummy	Hz	1 to 200 k
Slew rate	V/µs	20
Input impedance	GΩ // pF	40 // 0.4
Output impedance	Ω	< 50
Output Voltage Swing, min. @ 24-28 V CCP voltage supply	Vp	8
Noise (A-Weighted) max.	µV	2.5
Noise (A-Weighted) typ.	µV	1.8
Noise (Linear 20 Hz – 20 kHz) max.	µV	6
Noise (Linear 20 Hz – 20 kHz) typ.	µV	3.5
High-pass filter @3dB cut-off	Hz	TBD
Gain	dB	-0.35
Power supply (Constant Current Power)	mA	2 to 20 (typ. 4)
DC bias voltage, typ.	V	12
Temperature range, operation	°C / °F	-30 to 70 / -22 to 158
Temperature range, storage	°C / °F	-40 to 85 / -40 to 185
Humidity range non condensing	% RH	0 to 95
TEDS (IEEE 1451.4)		769 v. 0.9
Connector type		Microdot 10/32
CE/RoHS compliant/WEEE registered		Yes / Yes, Yes
Weight	g / oz	6.0 / 0.21

Conditions: 23 °C Ambient temperature, 4 mA / 24 V open loop CCP voltage, 18 pF dummy microphone & 3 m coax-cable.

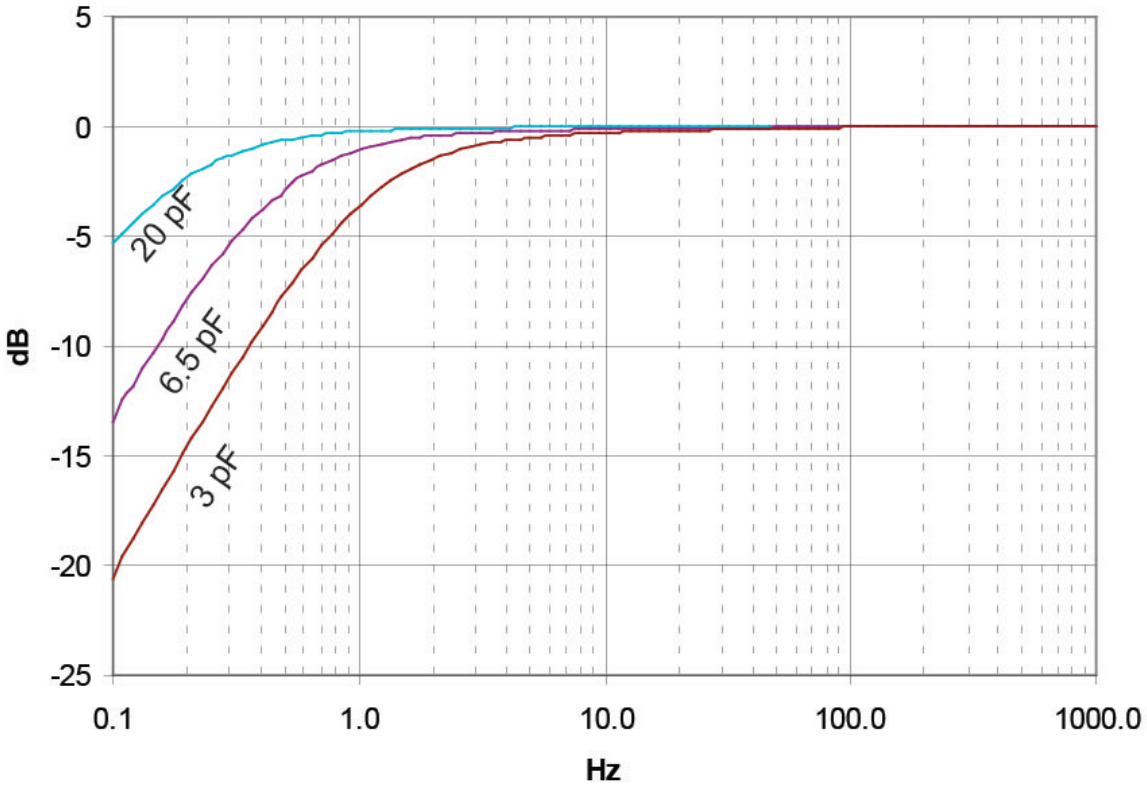

Typical low-frequency response of Type 26AL for ½ (20 pF), ¼ (6.5 pF) and ⅛ (3 pF) microphones

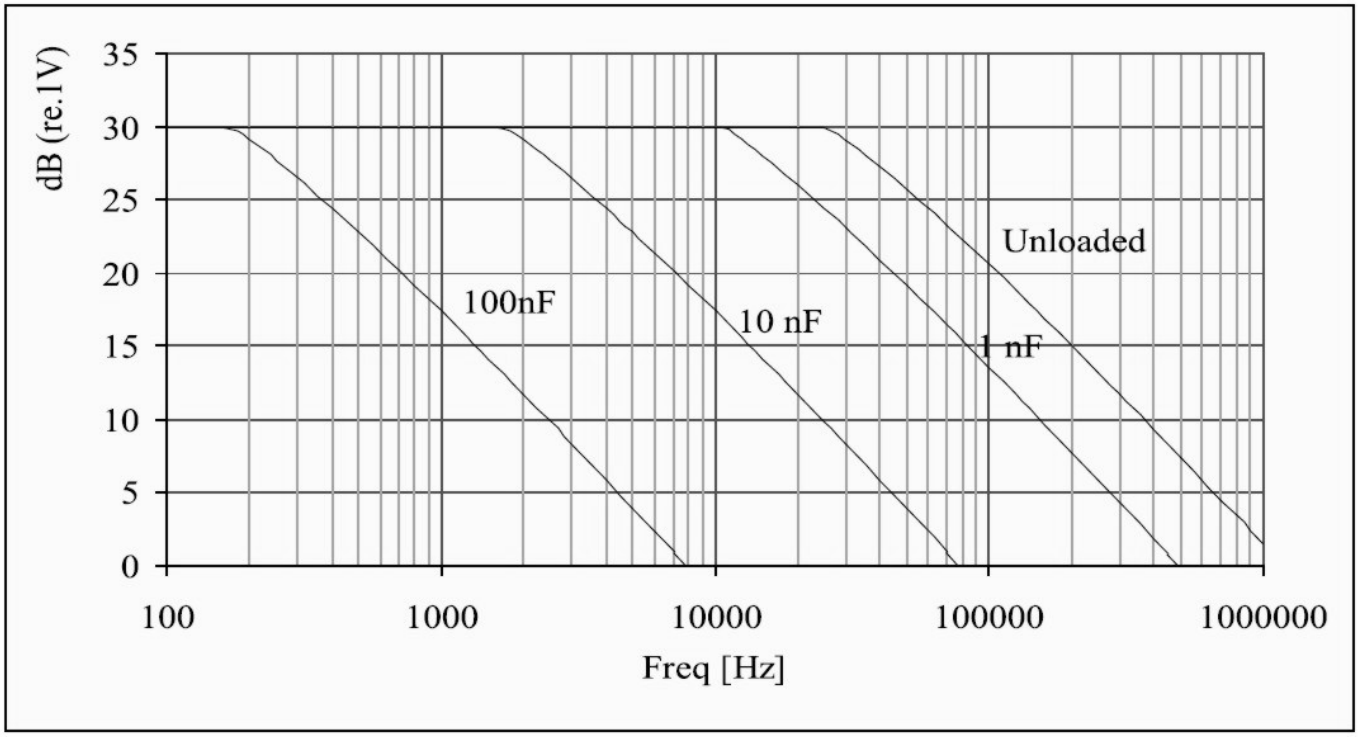

Typical max. rms output signal with 120 V and 30 V supply

GRAS Sound & Vibration reserves the right to change specifications and accessories without notice.

Dimensions

Dimensions in mm

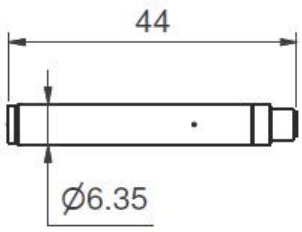

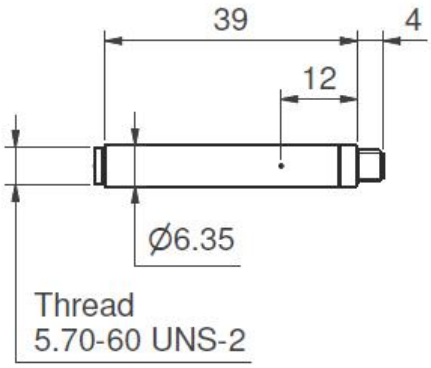

Ordering info

Included items

GR0010	Adapter for 1/4" preamplifier and 1/2" microphone

Optional items

GRAS AA0070	3 m Microdot - BNC Cable
GRAS AL0029	1/4" Microphone Holder, POM
GRAS AL0013	1/4" Microphone Holder, Stainless Steel
GRAS AL0005	Swivel head
GRAS AL0006	Tripod
GRAS RA0063	Adapter for 1/8" microphone and 1/4" preamplifier
GRAS RA0006	Right-angled (90°) Adapter for 1/4" Microphone and 1/4" Preamplifier
GRAS RA0080	6pF Preamplifier-input adapter for 1/4" microphones
GRAS 12AL	1-Channel CCP Power Module with A-weighting filter
GRAS 12AQ	2-Channel Universal Power Module with signal conditioning and PC interface

GRAS Sound & Vibration reserves the right to change specifications and accessories without notice.

GRAS Worldwide

Subsidiaries and distributors in more than 40 countries

HEAD OFFICE, DENMARK
GRAS SOUND & VIBRATION
Skovlytoften 33
2840 Holte
Denmark
Tel: +45 4566 4046
www.GRASacoustics.com
gras@grasacoustics.com

USA
GRAS SOUND & VIBRATION
9290 SW Nimbus Avenue
Beaverton, OR 97008
Tel: 503-627-0832
Toll Free: 800-231-7350
www.GRASacoustics.com
sales-usa@grasacoustics.com

UK
GRAS SOUND & VIBRATION
Unit 115, Gibson House,
Ermine Business Park, Huntingdon,
Cambridgeshire, PE29 6XU
Tel: +44 (0)7762 584 202
www.GRASacoustics.com
sales-uk@grasacoustics.com

CHINA
GRAS SOUND & VIBRATION
Room 502, Building T1,
No.1398 Ali Center
Shenchang Road,
Minhang District,
Shanghai, China, 201107
Tel: +86 21 400-888-9826
www.GRASacoustics.cn
cnsales@grasacoustics.com

About GRAS Sound & Vibration

GRAS is a worldwide leader in the sound and vibration industry. We develop and manufacture state-of-the-art measurement microphones to industries where acoustic measuring accuracy and repeatability is of utmost importance in R&D, QA and production. This includes applications and solutions for customers within the fields of aerospace, automotive, audiology, and consumer electronics. GRAS microphones are designed to live up to the high quality, durability and accuracy that our customers have come to expect and trust.

GRAS Sound & Vibration is represented through subsidiaries and distributors in more than 40 countries and is part of Axiometrix Solutions, a leading test solutions provider comprised of globally recognized measurement brands. Read more at www.GRASacoustics.com

www.GRASacoustics.com

GRAS

An Axiometrix Solutions Brand