GRAS 26CB

1/4" CCP Standard Preamplifier for Microphone with Microdot Connector

Freq range: 2.5 Hz - 200 kHz
Noise: 1.8 µV Gain: -0.35 dB
Special feature: General purpose

The GRAS 26CB 1/4" CCP Standard Preamplifier with Microdot Connector is a general-purpose preamplifier optimized for use with prepolarized condenser microphones. It is a small, robust unit and uses a GRAS CCP power supply, e.g., GRAS 12AL. It has a very low inherent noise level, a large dynamic range, and a frequency response from below 2 Hz to above 200 kHz.

GRAS Sound & Vibration
Skovlytoften 33, 2840 Holte, Denmark
www.grasacoustics.com

Typical applications and use

- CCP inputs
- Prepolarized microphones
- 1/2" precision microphones
- High levels and high frequencies

Design

Its small ceramic thick-film substrate has a very high input impedance and is shielded by a guard ring to minimize the influence of stray capacitance and microphonic interference.The GRAS 26CB is delivered with a built-in TEDS chip and can be programmed as a single unit with a microphone fitted.

The diameter is 6.35 mm (1/4"), length 44 mm and weight 19 g (0.67 oz)

It can be used with all prepolarized microphone cartridges, such as GRAS 40BE and 40BD 1/4" microphone and GRAS 40AE, 40AD, and 40AQ 1/2" microphones using the included GRAS GR0010 Adapter for 1/4" preamplifier and 1/2" microphone. It has an integrated Microdot output connector. The casing is made of stainless steel for maximum strength and durability.

Specifications

Frequency range (±0.2 dB) with 18 pF microphone dummy	Hz	2.5 to 200 k
Slew rate	V/µs	20
Input impedance	GΩ // pF	20 // 0.4
Output impedance	Ω	< 50
Output Voltage Swing, min. @ 24-28 V CCP voltage supply	Vp	8
Noise (A-Weighted) max.	µV	2.5
Noise (A-Weighted) typ.	µV	1.8
Noise (Linear 20 Hz – 20 kHz) max.	µV	6
Noise (Linear 20 Hz – 20 kHz) typ.	µV	3.5
Gain	dB	-0.35
Power supply (Constant Current Power)	mA	2 to 20 (typ. 4)
DC bias voltage, typ.	V	12
Temperature range, operation	°C / °F	-30 to 70 / -22 to 158
Temperature range, storage	°C / °F	-40 to 85 / -40 to 185
Humidity range non condensing	% RH	0 - 95
TEDS (IEEE 1451.4)		769 v. 0.9
Connector type		Microdot 10/32
CE/RoHS compliant/WEEE registered		Yes / Yes, Yes
Weight	g / oz	7 / 0.25

Dimensions

Dimensions in mm

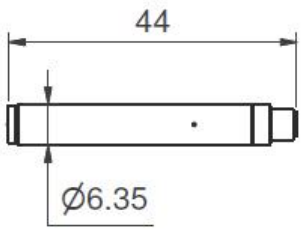

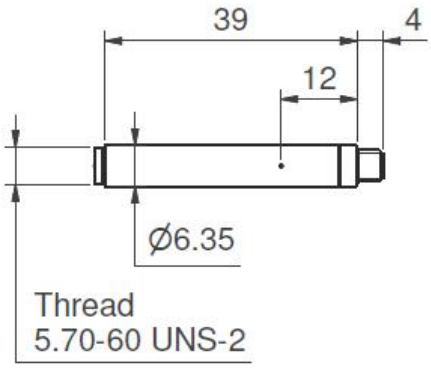

Ordering info

Included items

GRAS GR0010	Adapter for 1/4" preamplifier and 1/2" microphone

Optional items

GRAS AA0070	3 m Microdot - BNC Cable
GRAS AL0029	1/4" Microphone Holder, POM
GRAS AL0013	1/4" Microphone Holder, Stainless Steel
GRAS AL0005	Swivel head
GRAS AL0006	Tripod
GRAS RA0063	Adapter for 1/8" microphone and 1/4" preamplifier
GRAS RA0006	Right-angled (90°) Adapter for 1/4" Microphone and 1/4" Preamplifier
GRAS RA0080	6pF Preamplifier-input adapter for 1/4" microphones
GRAS 12AL	1-Channel CCP Power Module with A-weighting filter
GRAS 12AQ	2-Channel Universal Power Module with signal conditioning and PC interface

GRAS Sound & Vibration reserves the right to change specifications and accessories without notice.

GRAS Worldwide

Subsidiaries and distributors in more than 40 countries

HEAD OFFICE, DENMARK
GRAS SOUND & VIBRATION
Skovlytoften 33
2840 Holte
Denmark
Tel: +45 4566 4046
www.GRASacoustics.com
gras@grasacoustics.com

USA
GRAS SOUND & VIBRATION
9290 SW Nimbus Avenue
Beaverton, OR 97008
Tel: 503-627-0832
Toll Free: 800-231-7350
www.GRASacoustics.com
sales-usa@grasacoustics.com

UK
GRAS SOUND & VIBRATION
Unit 115, Gibson House,
Ermine Business Park, Huntingdon,
Cambridgeshire, PE29 6XU
Tel: +44 (0)7762 584 202
www.GRASacoustics.com
sales-uk@grasacoustics.com

CHINA
GRAS SOUND & VIBRATION
Room 502, Building T1,
No.1398 Ali Center
Shenchang Road,
Minhang District,
Shanghai, China, 201107
Tel: +86 21 400-888-9826
www.GRASacoustics.cn
cnsales@grasacoustics.com

About GRAS Sound & Vibration

GRAS is a worldwide leader in the sound and vibration industry. We develop and manufacture state-of-the-art measurement microphones to industries where acoustic measuring accuracy and repeatability is of utmost importance in R&D, QA and production. This includes applications and solutions for customers within the fields of aerospace, automotive, audiology, and consumer electronics. GRAS microphones are designed to live up to the high quality, durability and accuracy that our customers have come to expect and trust.

GRAS Sound & Vibration is represented through subsidiaries and distributors in more than 40 countries and is part of Axiometrix Solutions, a leading test solutions provider comprised of globally recognized measurement brands. Read more at www.GRASacoustics.com

www.GRASacoustics.com

GRAS

An Axiometrix Solutions Brand