GRAS 26CA

1/2'' CCP Standard Microphone Preamplifier with BNC Connector

Freq range: 2.5 Hz - 200 kHz
Noise: 1.8 µV Gain: -0.30 dB
Special feature: General purpose

The GRAS 1/2" Preamplifier GRAS 26CA is a general purpose preamplifier optimized for use with prepolarized condenser microphones. It is a small,robust unit and uses a GRAS CCP power supply (ICP ®), e.g. GRAS 12AL. It has a very low inherent noise level, and a large dynamic range and a frequency response from below 2 Hz to above 200 kHz.

GRAS Sound & Vibration
Skovlytoften 33, 2840 Holte, Denmark
www.grasacoustics.com

Typical applications and use

CCP inputs (ICP ®)

Prepolarized microphones

1/2" precision microphones

High levels and high frequencies

Design

The GRAS 26CA 1/2" CCP Standard Preamplifier is a small, robust unit and uses a CCP power supply (ICP ®), e.g. GRAS 12AL. It has a very low inherent noise level, a large dynamic range and a frequency response from below 2 Hz to above 200 kHz.

Its small ceramic thick-film substrate has a very high input impedance, and is shielded by a guard ring to minimise the influence of stray capacitance and microphonic interference.

The 26CA is delivered with Generation II TEDS. The calibration data is programmed into the built-in TEDS according to IEEE 1451.4 using UDID I27-0-0-0U. If your measurement platform supports Transducer Electronic Data Sheets you will be able to read and write data like properties and calibration data.

Generation II TEDS chip (DS2431) may require updated system software.

It can be used with all GRAS prepolarized microphones, namely: 1/2" microphones: GRAS 40AE, 40AD and 40AQ 1/4-inch microphones: GRAS 40BE and 40BD, using the optional 1/2"-inch to 1/4-inch adaptor RA0019.

It has an integrated BNC output connector. The casing is made of stainless steel for maximum strength and durability.

® ICP is a registered trademark of PCB Piezotronics Inc.

* Transducer Electronic Data Sheet - IEEE-P1451.4

Specifications

Frequency range (±0.2 dB) with 18 pF microphone dummy	Hz	2.5 to 200 k
Slew rate	V/µs	20
Input impedance	GΩ // pF	20 // 0.4
Output impedance	Ω	< 50
Output Voltage Swing, min. @ 24-28 V CCP voltage supply	Vp	8
Noise (A-Weighted) max.	µV	2.5
Noise (A-Weighted) typ.	µV	1.8
Noise (Linear 20 Hz – 20 kHz) max.	µV	6
Noise (Linear 20 Hz – 20 kHz) typ.	µV	3.5
Gain	dB	-0.30
Power supply (Constant Current Power)	mA	2 to 20 (typical 4)
DC bias voltage, typ.	V	12
Temperature range, operation	°C / °F	-30 to 70 / -22 to 158
Temperature range, storage	°C / °F	-40 to 85 / -40 to 185
Humidity range non condensing	% RH	0 - 95
TEDS UDID (IEEE 1451.4)		I27-0-0-0U
Connector type		BNC
CE/RoHS compliant/WEEE registered		Yes / Yes, Yes
Weight	g / oz	26.0 / 0.92

Conditions: 23 °C Ambient temperature, 4 mA / 24 V open loop CCP voltage, 18 pF dummy microphone, 3 m output coax-cable.

GRAS Sound & Vibration reserves the right to change specifications and accessories without notice.

Dimensions

Dimensions in mm

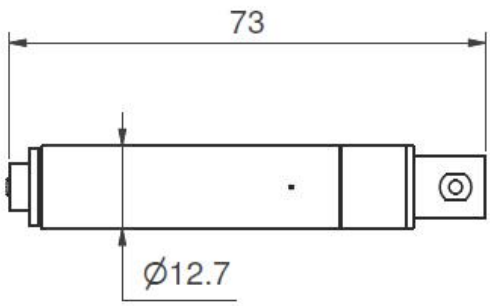

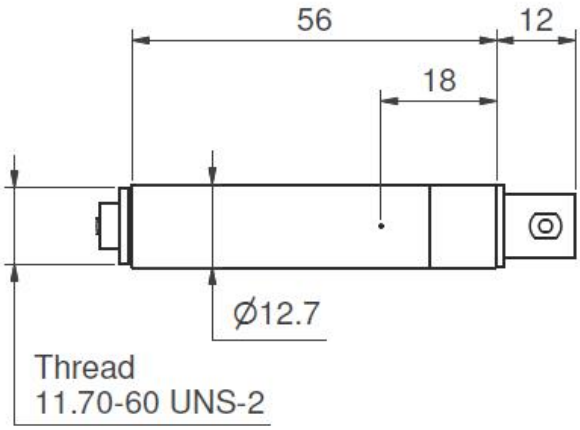

Optional items

GRAS AA0035	3 m BNC - BNC Cable
GRAS AL0008	1/2" Microphone Holder, POM
GRAS AL0012	1/2" Microphone Holder, Stainless Steel
GRAS AL0005	Swivel head
GRAS AL0006	Tripod
GRAS RA0019	Adapter for 1/4" microphone and 1/2" preamplifier
GRAS RA0073	Adapter for 1" microphone and 1/2" preamplifier
GRAS RA0190	Right-angled (90°) Adapter for 1/2" Microphone and 1/2" Preamplifier
GRAS RA0018	20 dB Attenuator for prepolarized 1/2" microphones
GRAS RA0062	20 pF Preamplifier-input Adapter for 1/2" preamplifiers
GRAS 12AL	1-Channel CCP Power Module with A-weighting filter
GRAS 12AQ	2-Channel Universal Power Module with signal conditioning and PC interface

GRAS Sound & Vibration reserves the right to change specifications and accessories without notice.

GRAS Worldwide

Subsidiaries and distributors in more than 40 countries

HEAD OFFICE, DENMARK
GRAS SOUND & VIBRATION
Skovlytoften 33
2840 Holte
Denmark
Tel: +45 4566 4046
www.GRASacoustics.com
gras@grasacoustics.com

USA
GRAS SOUND & VIBRATION
9290 SW Nimbus Avenue
Beaverton, OR 97008
Tel: 503-627-0832
Toll Free: 800-231-7350
www.GRASacoustics.com
sales-usa@grasacoustics.com

UK
GRAS SOUND & VIBRATION
Unit 115, Gibson House,
Ermine Business Park, Huntingdon,
Cambridgeshire, PE29 6XU
Tel: +44 (0)7762 584 202
www.GRASacoustics.com
sales-uk@grasacoustics.com

CHINA
GRAS SOUND & VIBRATION
Room 502, Building T1,
No.1398 Ali Center
Shenchang Road,
Minhang District,
Shanghai, China, 201107
Tel: +86 21 400-888-9826
www.GRASacoustics.cn
cnsales@grasacoustics.com

About GRAS Sound & Vibration

GRAS is a worldwide leader in the sound and vibration industry. We develop and manufacture state-of-the-art measurement microphones to industries where acoustic measuring accuracy and repeatability is of utmost importance in R&D, QA and production. This includes applications and solutions for customers within the fields of aerospace, automotive, audiology, and consumer electronics. GRAS microphones are designed to live up to the high quality, durability and accuracy that our customers have come to expect and trust.

GRAS Sound & Vibration is represented through subsidiaries and distributors in more than 40 countries and is part of Axiometrix Solutions, a leading test solutions provider comprised of globally recognized measurement brands. Read more at www.GRASacoustics.com

www.GRASacoustics.com

GRAS

An Axiometrix Solutions Brand