GRAS 26CA-HT

1/2'' CCP High Temperature Preamplifier with BNC Connector

Freq range: 2.5 Hz - 200 kHz
Noise: 1.8 µV Gain: -0.30 dB
Special feature: High Temperature

The GRAS 26CA-HT 1/2" CCP High Temperature Preamp (BNC) is a 1/2" CCP preamplifier for use with prepolarized microphones. It is optimized for high-temperature applications up to 120 °C (248 °F). It has a low inherent noise level, a large dynamic range and a frequency response from 2 Hz to 200 kHz.

GRAS Sound & Vibration
Skovlytoften 33, 2840 Holte, Denmark
www.grasacoustics.com

Typical applications and use

Prepolarized microphones

Operating temperature up to 120 °C (248 °F)

Low noise floor and wide frequency range

Design

The GRAS 1/2" Preamplifier 26CA-HT is similar to the GRAS 26CA Standard Preamplifier, but optimzed for use in high-temperature applications up to 120 °C (248 °F).

It uses a CCP (Constant Current Power) supply, e.g. GRAS 12AL 1-Channel CCP Power Module with A-weighting filter. It has a very low inherent noise level, a large dynamic range and a frequency response from below 2 Hz to above 200 kHz. Its small ceramic thick-film substrate has a very high input impedance, and is shielded by a guard ring to minimise the influence of stray capacitance and microphonic interference.

It has TEDS* according to IEEE P1451.4 for easy self identification and reading of calibration data.

It has an integrated BNC output connector and can be used with all GRAS prepolarized microphones. The casing is made of stainless steel for maximum strength and durability.

* Transducer Electronic Data Sheet

Specifications

Frequency range (±0.2 dB) with 18 pF microphone dummy	Hz	2.5 to 200 k
Slew rate	V/µs	20
Input impedance	GΩ // pF	20 // 0.4
Output impedance	Ω	< 50
Output Voltage Swing, min. @ 24-28 V CCP voltage supply	Vp	8
Noise (A-Weighted) max.	µV	2.5
Noise (A-Weighted) typ.	µV	1.8
Noise (Linear 20 Hz – 20 kHz) max.	µV	6
Noise (Linear 20 Hz – 20 kHz) typ.	µV	3.5
Gain	dB	-0.30
Power supply (Constant Current Power)	mA	2 to 20 (typical 4)
DC bias voltage, typ.	V	12
Temperature range, operation	°C / °F	-30 to 120 / -22 to 248
Temperature range, storage	°C / °F	-40 to 85 / -40 to 185
Humidity range non condensing	% RH	0 - 95
TEDS (IEEE 1451.4)		769 v. 0.9
Connector type		BNC
CE/RoHS compliant/WEEE registered		Yes / Yes / Yes
Weight	g / oz	26.0 / 0.92

Conditions: 23 °C Ambient temperature, 4 mA / 24 V open loop CCP voltage, 18 pF dummy microphone, 3 m output coax-cable.

The TEDS is guaranteed to work properly up to 85 °C. We have no indication that it will not work properly up to 120 °C, however we cannot guarantee that it will remain stable at this level.

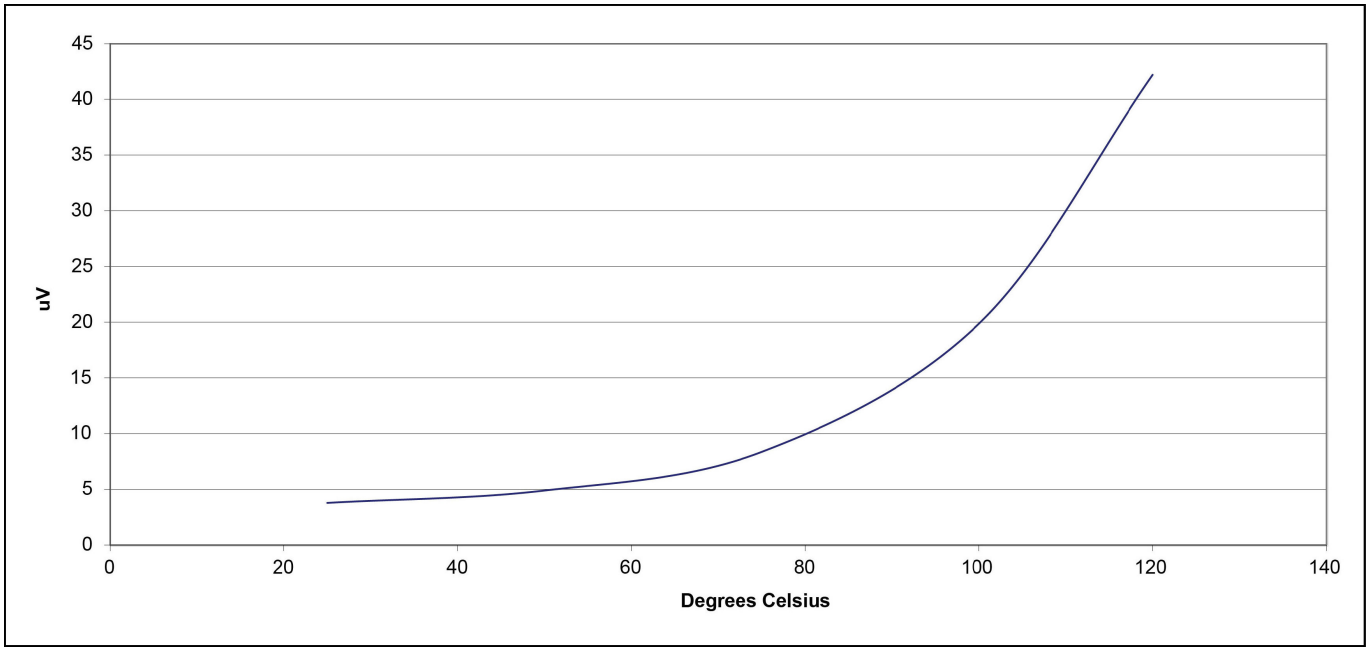

Noise vs. temperature, linear 20 Hz - 20 kHz

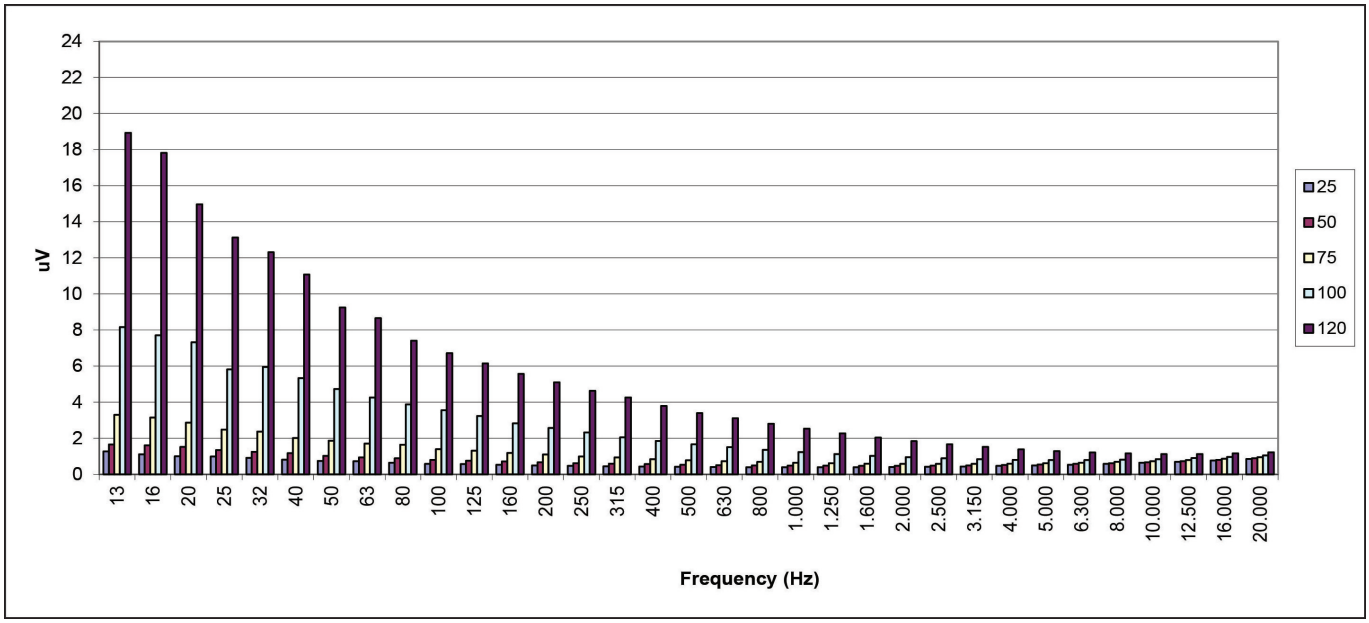

Typical noise level at 25, 50, 75, 100 and 120 °C, 1/3 octave bands.

GRAS Sound & Vibration reserves the right to change specifications and accessories without notice.

Dimensions

Dimensions in mm

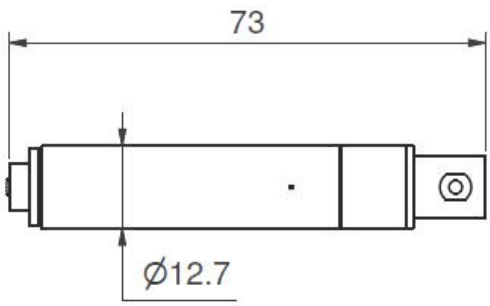

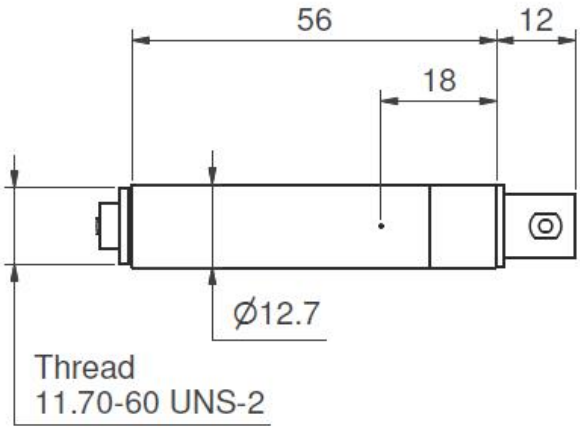

Optional items

GRAS AA0018	3 m BNC - Microdot Cable, High Temperature
GRAS AE0046	BNC male - Microdot female Adapter
GRAS AL0012	1/2" Microphone Holder, Stainless Steel
GRAS RA0019	Adapter for 1/4" microphone and 1/2" preamplifier
GRAS RA0073	Adapter for 1" microphone and 1/2" preamplifier
GRAS RA0190	Right-angled (90°) Adapter for 1/2" Microphone and 1/2" Preamplifier
GRAS 12AL	1-Channel CCP Power Module with A-weighting filter
GRAS 12AQ	2-Channel Universal Power Module with signal conditioning and PC interface

GRAS Sound & Vibration reserves the right to change specifications and accessories without notice.

GRAS Worldwide

Subsidiaries and distributors in more than 40 countries

HEAD OFFICE, DENMARK
GRAS SOUND & VIBRATION
Skovlytoften 33
2840 Holte
Denmark
Tel: +45 4566 4046
www.GRASacoustics.com
gras@grasacoustics.com

USA
GRAS SOUND & VIBRATION
9290 SW Nimbus Avenue
Beaverton, OR 97008
Tel: 503-627-0832
Toll Free: 800-231-7350
www.GRASacoustics.com
sales-usa@grasacoustics.com

UK
GRAS SOUND & VIBRATION
Unit 115, Gibson House,
Ermine Business Park, Huntingdon,
Cambridgeshire, PE29 6XU
Tel: +44 (0)7762 584 202
www.GRASacoustics.com
sales-uk@grasacoustics.com

CHINA
GRAS SOUND & VIBRATION
Room 502, Building T1,
No.1398 Ali Center
Shenchang Road,
Minhang District,
Shanghai, China, 201107
Tel: +86 21 400-888-9826
www.GRASacoustics.cn
cnsales@grasacoustics.com

About GRAS Sound & Vibration

GRAS is a worldwide leader in the sound and vibration industry. We develop and manufacture state-of-the-art measurement microphones to industries where acoustic measuring accuracy and repeatability is of utmost importance in R&D, QA and production. This includes applications and solutions for customers within the fields of aerospace, automotive, audiology, and consumer electronics. GRAS microphones are designed to live up to the high quality, durability and accuracy that our customers have come to expect and trust.

GRAS Sound & Vibration is represented through subsidiaries and distributors in more than 40 countries and is part of Axiometrix Solutions, a leading test solutions provider comprised of globally recognized measurement brands. Read more at www.GRASacoustics.com

www.GRASacoustics.com

GRAS

An Axiometrix Solutions Brand