GRAS 26AS

1/4" Standard Preamplifier with 3 m Integrated Cable, Very Short

Freq range: 2.5 Hz to 200 kHz
Noise: 6 µV Gain: -0.29 dB
Special feature: Very short

The GRAS ¼" Preamplifier Type 26AS is a small robust unit short enough for use in confined spaces, e.g., for binaural measurements with the KEMAR Manikin (GRAS 45BB or GRAS 45BC) or GRAS 45CA Hearing-protector Test Fixture. It has a very low inherent-noise level, a wide dynamic range, and a frequency response from below 2 Hz to above 200 kHz.

GRAS Sound & Vibration
Skovlytoften 33, 2840 Holte, Denmark
www.grasacoustics.com

Typical applications and use

- Confined spaces
- High frequency measurements
- High pressure measurements
- Sound intensity measurements
- Near-field measurements
- Anechoic boxes
- Hearing-aid measurements

Design

All GRAS microphone preamplifiers are based on a small ceramic thick-film substrate with a very high input impedance. The ceramic substrate is shielded by a guard ring to minimise the influence of stray capacitance and microphonic interference. The casing is made of stainless steel for maximum strength and durability. The small dimensions of this preamplifier ensures reliable operation under humid conditions owing to the heat generated by internal power dissipation.

Dynamic Range

GRAS 26AS can handle both single and dual-sided power supplies. The supply can vary between 28 VDC and 120 VDC single-sided or ±14 VDC and ±60 VDC dual-sided. When using the high supply voltage (120 VDCor ±60 VDC), the dynamic range exceeds140 dB.

Noise

The electrical circuit in GRAS 26AS is built on a ceramic substrate using selected low-noise components to gain very low self-noise. The electrical self-noise is so low that system noise is mainly determined by the microphone capsule's thermal noise.

Frequency response

The low-frequency cut-off of the GRAS 26AS preamplifier is mainly determined by the input impedance of the preamplifier and the capacitance of the microphone capsule. The capacities 20 pF,6.4 pF and 3 pF equal the typical capacitances of 1/2", 1/4" and 1/8" microphone cartridges respectively.

The high-frequency cut-off is determined by the preamplifier's ability to drive capacitive loads (slewrate), caused by the cable. For large-signals, the effects of these parameters must be accounted for when measurements are performed. The large-signal response for Type 26AS for various capacitive loads corresponding to different cable lengths is shown in the data sheet. The output level is in decibels relative to 1 Volt. Typical capacitance for the cable is 100 pF/m(30pF/foot).

Connector

The GRAS 26AS is provided with a 3 m lightweight cable terminating in a 7-pin LEMO series 1B plug. The cable is only 2.5 mm in diameter and will withstand temperatures from−40 °C to +150 °C. An adaptor GR0010 for GRAS 1/2" microphones is included.

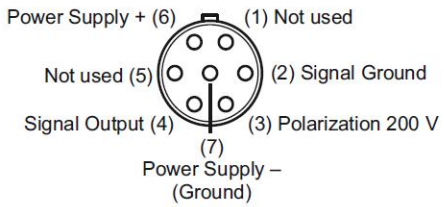

7-pin LEMO plug 1B male (ext. view)

Specifications

Frequency range (±0.2 dB) with 18 pF microphone dummy	Hz	2.5 to 80 k
Slew rate	V/µs	20
Input impedance	GΩ // pF	20 // 0.4
Output impedance	Ω	75
Output Voltage Swing, max. @ ±14V/+28V power supply	Vp	10
Output Voltage Swing, max. @ ±60V/+120V power supply	Vp	50
Noise (A-Weighted) max.	µV	6
Noise (A-Weighted) typ.	µV	4
Noise (Linear 20 Hz – 20 kHz) max.	µV	10
Noise (Linear 20 Hz – 20 kHz) typ.	µV	8
High-pass filter @3dB cut-off	Hz	TBD
Gain	dB	-0.29
Power supply, single	V	28 to 120
Power supply, balanced	V	±14 to ±60
DC bias voltage, typ.	V	-1.5 to 5
DC-offset, min., single suppy	V	0.5 x Vs - 1
DC-offset, max., single suppy	V	0.5 x Vs + 4
DC-offset, balanced supply	V	-1 to 4
Temperature range, operation	°C / °F	-30 to 70 / -22 to 158
Temperature range, storage	°C / °F	-40 to 85 / -40 to 185
Humidity range non condensing	% RH	0 to 95
Connector type		7-pin LEMO (FGG.1B.307)
CE/RoHS compliant/WEEE registered		Yes / Yes, Yes
Weight	g / oz	TBD / TBD
Weight with cable and connector	g / oz	TBD / TBD

Conditions: 23 °C Ambient temperature, ±60V/+120V power supply, 18 pF dummy microphone, 3 m output cable.

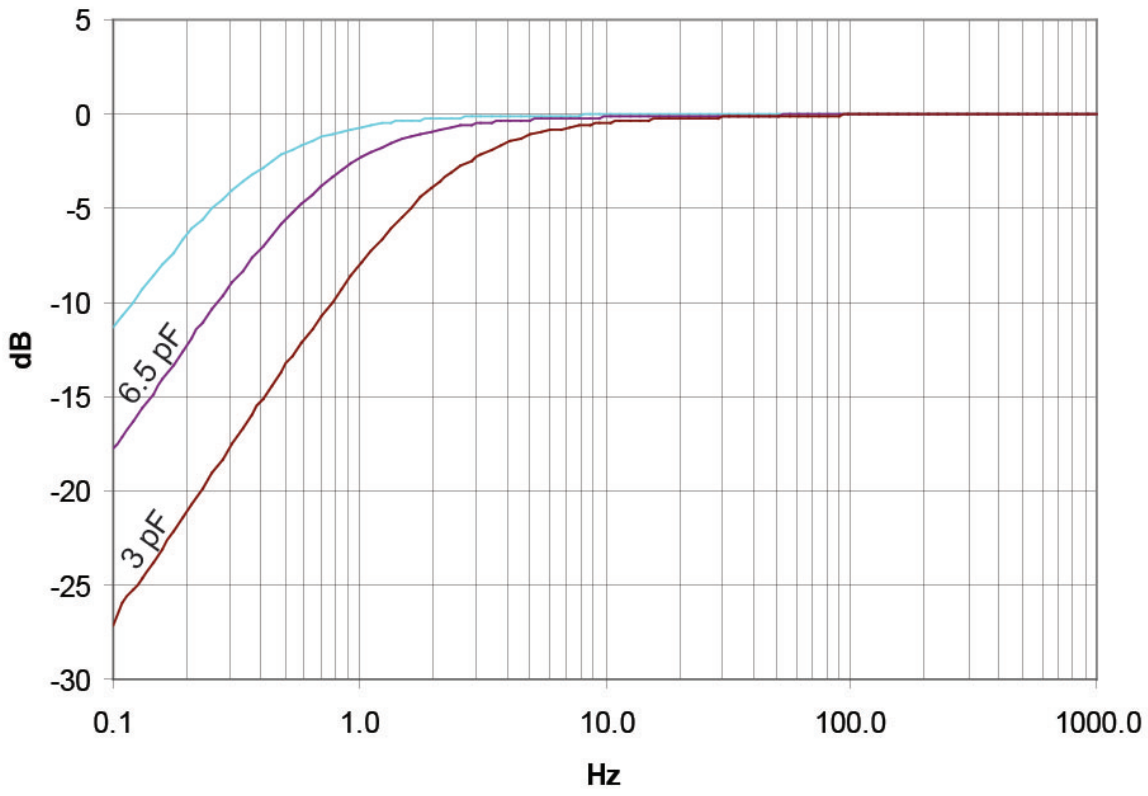

Typical low-frequency response of Type 26AL for ½ (20 pF), ¼ (6.5 pF) and ⅛ (3 pF) microphones

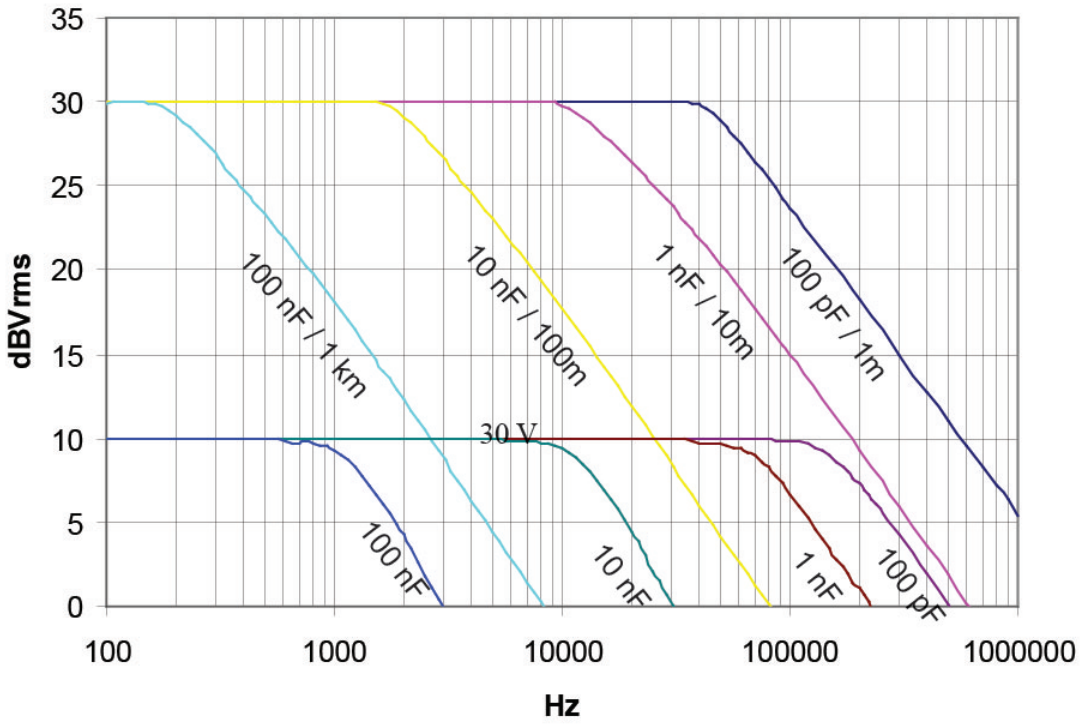

Typical max. rms output signal with 120 V and 30 V supply

GRAS Sound & Vibration reserves the right to change specifications and accessories without notice.

Dimensions

Dimensions in mm

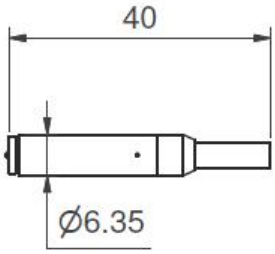

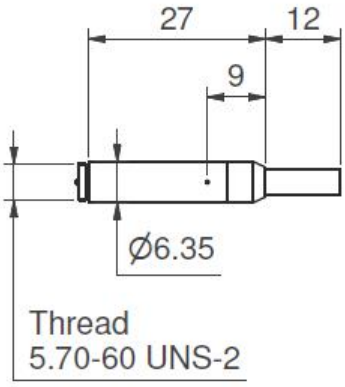

Included items

GRAS GR0010	Adapter for 1/4" preamplifier and 1/2" microphone

Optional items

GRAS AL0029	1/4" Microphone Holder, POM
GRAS AL0013	1/4" Microphone Holder, Stainless Steel
GRAS AL0005	Swivel head
GRAS AL0006	Tripod
GRAS RA0063	Adapter for 1/8" microphone and 1/4" preamplifier
GRAS RA0006	Right-angled (90°) Adapter for 1/4" Microphone and 1/4" Preamplifier
GRAS RA0080	6pF Preamplifier-input adapter for 1/4" microphones
GRAS 12AA	2-Channel Power Module with gain, filters and SysCheck generator
GRAS 12AQ	2-Channel Universal Power Module with signal conditioning and PC interface

GRAS Sound & Vibration reserves the right to change specifications and accessories without notice.

GRAS Worldwide

Subsidiaries and distributors in more than 40 countries

HEAD OFFICE, DENMARK
GRAS SOUND & VIBRATION
Skovlytoften 33
2840 Holte
Denmark
Tel: +45 4566 4046
www.GRASacoustics.com
gras@grasacoustics.com

USA
GRAS SOUND & VIBRATION
9290 SW Nimbus Avenue
Beaverton, OR 97008
Tel: 503-627-0832
Toll Free: 800-231-7350
www.GRASacoustics.com
sales-usa@grasacoustics.com

UK
GRAS SOUND & VIBRATION
Unit 115, Gibson House,
Ermine Business Park, Huntingdon,
Cambridgeshire, PE29 6XU
Tel: +44 (0)7762 584 202
www.GRASacoustics.com
sales-uk@grasacoustics.com

CHINA
GRAS SOUND & VIBRATION
Room 502, Building T1,
No.1398 Ali Center
Shenchang Road,
Minhang District,
Shanghai, China, 201107
Tel: +86 21 400-888-9826
www.GRASacoustics.cn
cnsales@grasacoustics.com

About GRAS Sound & Vibration

GRAS is a worldwide leader in the sound and vibration industry. We develop and manufacture state-of-the-art measurement microphones to industries where acoustic measuring accuracy and repeatability is of utmost importance in R&D, QA and production. This includes applications and solutions for customers within the fields of aerospace, automotive, audiology, and consumer electronics. GRAS microphones are designed to live up to the high quality, durability and accuracy that our customers have come to expect and trust.

GRAS Sound & Vibration is represented through subsidiaries and distributors in more than 40 countries and is part of Axiometrix Solutions, a leading test solutions provider comprised of globally recognized measurement brands. Read more at www.GRASacoustics.com

www.GRASacoustics.com

GRAS

An Axiometrix Solutions Brand