GRAS 26AM

1/2'' Standard Preamplifier with 3 m integrated cable

Freq range: 2.5 Hz - 200 kHz
Noise: 1.8 µV
Gain: -0.25 dB
Special feature: General purpose

The GRAS 26AM ½-inch Preamplifier is a small robust unit optimised for acoustic measurements using condenser microphones. It hase a very low inherent noise level, a wide dynamic range and a frequency response from below 2 Hz to above 200 kHz.

GRAS Sound & Vibration
Skovlytoften 33, 2840 Holte, Denmark
www.grasacoustics.com

Typical application & use

Precision measurements

Low-pressure measurements

General-purpose preamplifiers

Design

All GRAS microphone preamplifiers are based on a small ceramic thick-film substrate with a very high input impedance. The ceramic substrate is shielded by a guard ring to minimise the influence of stray capacitance and microphonic interference. The casing is made of stainless steel for maximum strength and durability. The small dimensions of the 26AM preamplifier ensures reliable operation under humid conditions owing to the heat generated by internal power dissipation.

Compatibility

The 26AM preamplifier is compatible with ½-inch microphones as defined in international standard IEC1094 Measurement Microphones, Part 4: Specifications for working standard microphones. The mounting thread (11.7 mm - 60 UNS-2) is compatiblewith other available makes of similar microphone preamplifiers.

26AM is provided with a 3 m high-quality cable terminating with a 7-pinLEMO series 1B plug.

Connector

LEMO connector 1B male (Outside view)

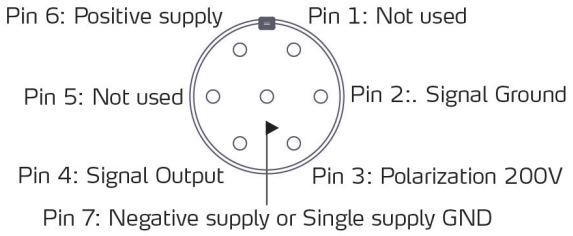

Voltage supply: Single 28-120V or Dual ±14V to ±60V

7-pin LEMO 1B male (ext. view)

Specifications

Frequency range (±0.2 dB) with 18 pF microphone dummy	Hz	2.5 to 200 k
Slew rate	V/µs	20
Input impedance	GΩ // pF	20 // 0.4
Output impedance	Ω	75
Output Voltage Swing, max. @ ±14V/+28V power supply	Vp	10
Output Voltage Swing, max. @ ±60V/+120V power supply	Vp	50
Noise (A-Weighted) max.	µV	2.5
Noise (A-Weighted) typ.	µV	1.8
Noise (Linear 20 Hz – 20 kHz) max.	µV	6
Noise (Linear 20 Hz – 20 kHz) typ.	µV	3.5
High-pass filter @3dB cut-off	Hz	TBD
Gain	dB	-0.25
Power supply, single	V	28 to 120
Power supply, balanced	V	±14 to ±60
DC-offset, min., single suppy	V	0.5 x Vs - 1
DC-offset, max., single suppy	V	0.5 x Vs + 4
DC-offset, balanced supply	V	-1 to 4
Temperature range, operation	°C / °F	-30 to 70 / -22 to 158
Temperature range, storage	°C / °F	-40 to 85 / -40 to 185
Humidity range non condensing	% RH	0 to 95
Humidity coefficient @250 Hz	dB/% RH	TBD
Connector type		7-pin LEMO (FGG.1B.307)
CE/RoHS compliant/WEEE registered		Yes/Yes, Yes
Weight	g / oz	32.0 / 1.13

Conditions: 23 °C Ambient temperature, ±60V/+120V power supply, 18 pF dummy microphone, 3 m output cable.

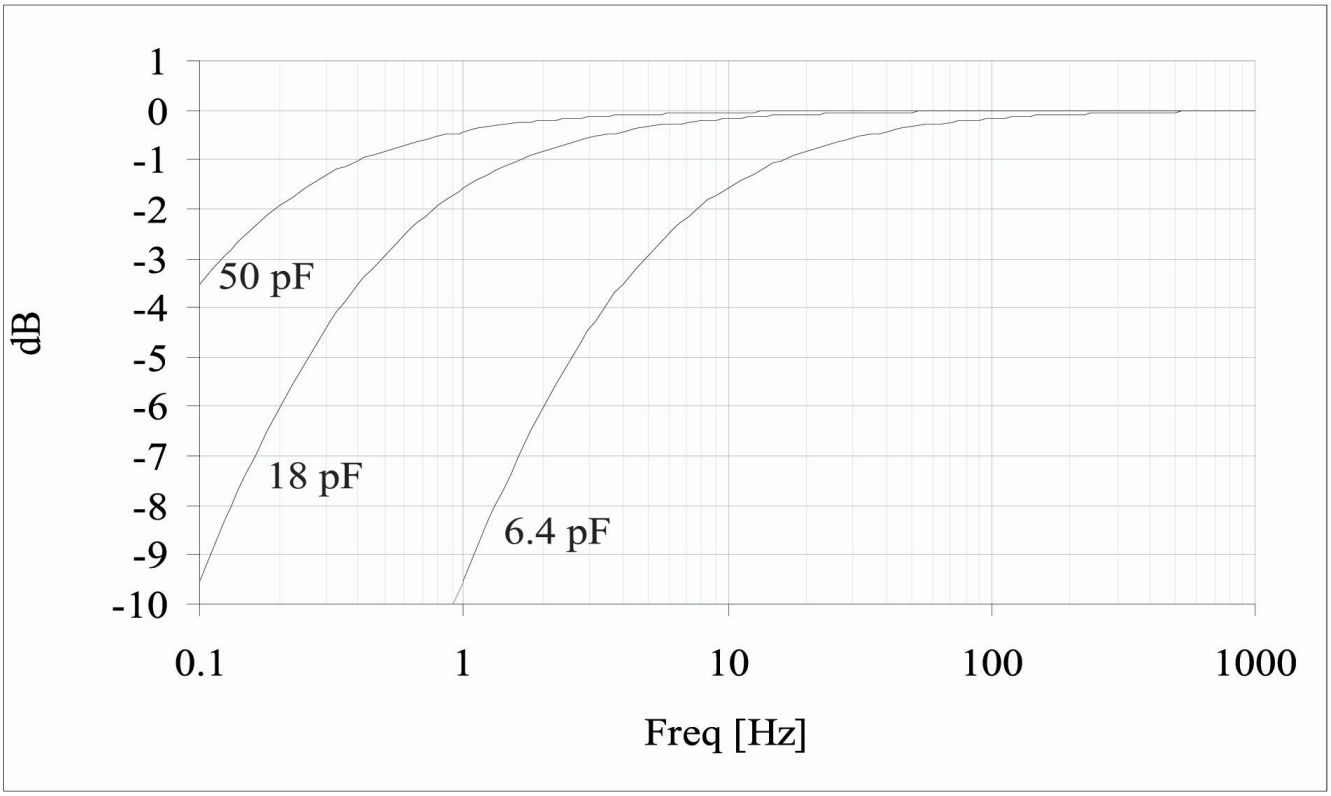

Low frequency response for various microphone capacities

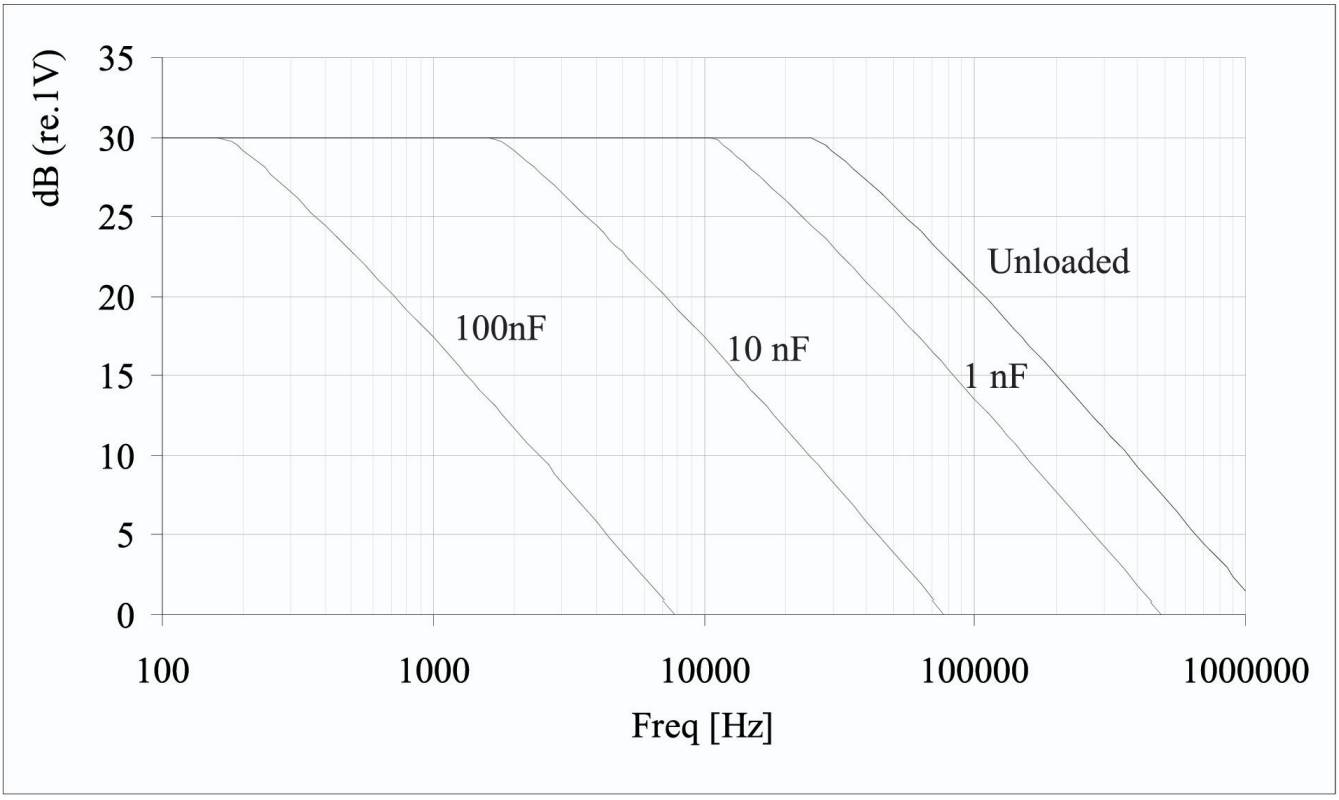

Max. RMS output signal for various cable loads with 120 V supply

GRAS Sound & Vibration reserves the right to change specifications and accessories without notice.

Dimensions

Dimensions in mm

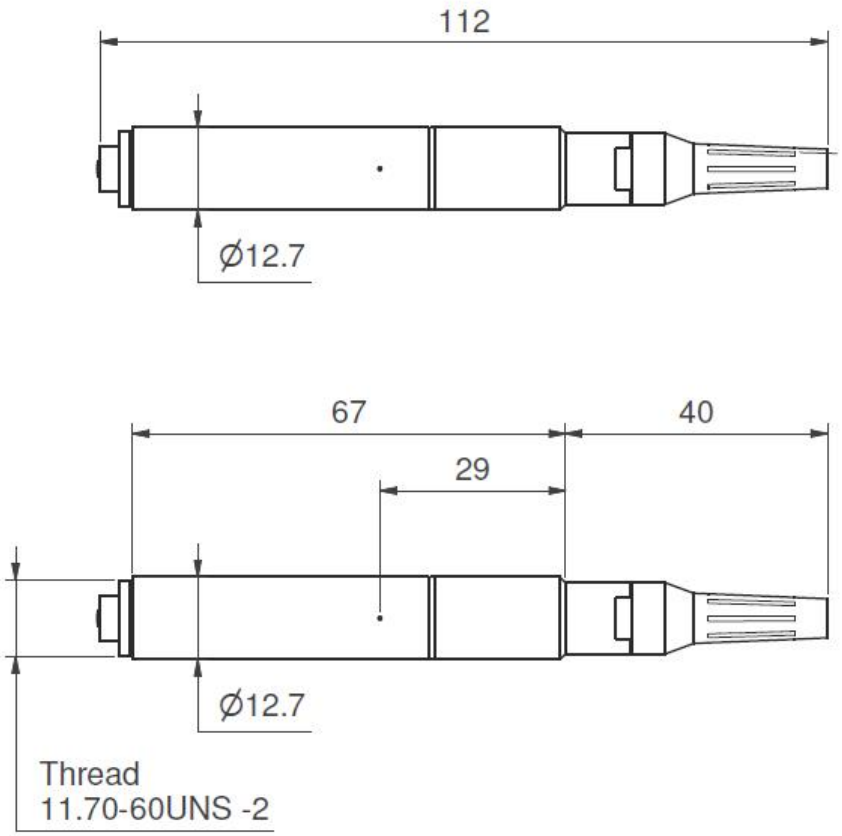

Optional items

GRAS AL0008	1/2" Microphone Holder, POM
GRAS AL0012	1/2" Microphone Holder, Stainless Steel
GRAS AL0005	Swivel head
GRAS AL0006	Tripod
GRAS RA0019	Adapter for 1/4" microphone and 1/2" preamplifier
GRAS RA0073	Adapter for 1" microphone and 1/2" preamplifier
GRAS RA0190	Right-angled (90°) Adapter for 1/2" Microphone and 1/2" Preamplifier
GRAS RA0016	20 dB Attenuator for externally polarized 1/2" microphones
GRAS RA0062	20 pF Preamplifier-input Adapter for 1/2" preamplifiers
GRAS 12AA	2-Channel Power Module with gain, filters and SysCheck generator
GRAS 12AQ	2-Channel Universal Power Module with signal conditioning and PC interface

GRAS Sound & Vibration reserves the right to change specifications and accessories without notice.

GRAS Worldwide

Subsidiaries and distributors in more than 40 countries

HEAD OFFICE, DENMARK
GRAS SOUND & VIBRATION
Skovlytoften 33
2840 Holte
Denmark
Tel: +45 4566 4046
www.GRASacoustics.com
gras@grasacoustics.com

USA
GRAS SOUND & VIBRATION
9290 SW Nimbus Avenue
Beaverton, OR 97008
Tel: 503-627-0832
Toll Free: 800-231-7350
www.GRASacoustics.com
sales-usa@grasacoustics.com

UK
GRAS SOUND & VIBRATION
Unit 115, Gibson House,
Ermine Business Park, Huntingdon,
Cambridgeshire, PE29 6XU
Tel: +44 (0)7762 584 202
www.GRASacoustics.com
sales-uk@grasacoustics.com

CHINA
GRAS SOUND & VIBRATION
Room 502, Building T1,
No.1398 Ali Center
Shenchang Road,
Minhang District,
Shanghai, China, 201107
Tel: +86 21 400-888-9826
www.GRASacoustics.cn
cnsales@grasacoustics.com

About GRAS Sound & Vibration

GRAS is a worldwide leader in the sound and vibration industry. We develop and manufacture state-of-the-art measurement microphones to industries where acoustic measuring accuracy and repeatability is of utmost importance in R&D, QA and production. This includes applications and solutions for customers within the fields of aerospace, automotive, audiology, and consumer electronics. GRAS microphones are designed to live up to the high quality, durability and accuracy that our customers have come to expect and trust.

GRAS Sound & Vibration is represented through subsidiaries and distributors in more than 40 countries and is part of Axiometrix Solutions, a leading test solutions provider comprised of globally recognized measurement brands. Read more at www.GRASacoustics.com

www.GRASacoustics.com

GRAS

An Axiometrix Solutions Brand