GRAS 26AI

1/2'' Preamplifier with Integrated Connector, Low Frequency

Freq range: 1 Hz to 200 kHz
Noise: 1.8 µV
Gain: -0.29 dB
Special feature: Low frequency applications

The 26AI is a 1/2" microphone preamplifier with integrated 7-pin LEMO male connector and 40 GΩ input impedance.

GRAS Sound & Vibration
Skovlytoften 33, 2840 Holte, Denmark
www.grasacoustics.com

Introduction

GRAS26AI is a preamplifier designed for low-frequency applications in the laboratory and field and accommodates directly for all IEC 61094 standardized 1/2" externally polarized measurement microphones.

It is rugged and reliable and can handle microphone signals up to 50 Vpeak within 1 Hz to 200 kHz. The printed circuit board is made by use of thick-film substrate technology and optimized with respect to maximum suppression of microphonics and moisture rejection.

The high-quality, standard 7-pin LEMO male connector is integrated into the preamplifier and ensures that only one type of connector and cable is required for both connection and extension.

26AI is factory calibrated individually and delivered with a calibration chart stating its A-weighted and linear self-noise.

Compatibility

These preamplifiers are compatible with 1/2-inch microphones as defined in international standard IEC1094 Measurement Microphones, Part 4: Specifications for working standard microphones. The mounting thread (11.7 mm - 60 UNS-2) is compatible with other available makes of similar microphone preamplifiers.

GRAS 26AI is provided with an integrated 7-pin LEMO series 1B plug.

Specifications

Frequency range (±0.2 dB) with 18 pF microphone dummy	Hz	1 to 200 k
Slew rate	V/µs	20
Input impedance	GΩ // pF	40 // 0.4
Output impedance	Ω	75
Output Voltage Swing, max. @ ±14V/+28V power supply	Vp	12
Output Voltage Swing, max. @ ±60V/+120V power supply	Vp	50
Noise (A-Weighted) max.	µV	2.5
Noise (A-Weighted) typ.	µV	1.8
Noise (Linear 20 Hz – 20 kHz) max.	µV	6
Noise (Linear 20 Hz – 20 kHz) typ.	µV	3.5
Gain	dB	-0.29
Power supply, single	V	28 to 120
Power supply, balanced	V	±14 to ±60
DC-offset, min., single suppy	V	0.5 x Vs - 1
DC-offset, max., single suppy	V	0.5 x Vs + 4
DC-offset, balanced supply	V	-1 to 4
Temperature range, operation	°C / °F	-30 to 70 / -22 to 158
Temperature range, storage	°C / °F	-40 to 85 / -40 to 185
Humidity range non condensing	% RH	0 to 95
TEDS (IEEE 1451.4)		769 v. 0.9
Connector type		7-pin LEMO (FGG.1B.307)
CE/RoHS compliant/WEEE registered		Yes / Yes, Yes
Weight	g / oz	22 / 0.78

Conditions: 23 °C Ambient temperature, ±60V/+120V power supply, 18 pF dummy microphone, 3 m output cable.

GRAS Sound & Vibration reserves the right to change specifications and accessories without notice.

Dimensions

Dimensions in mm

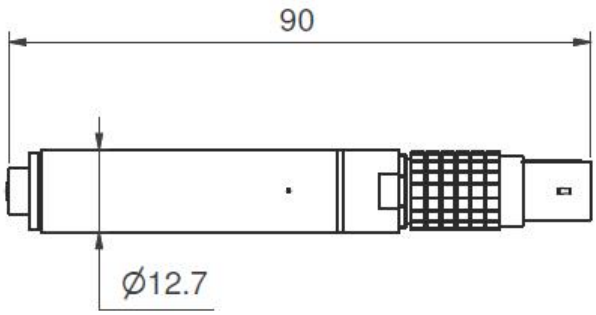

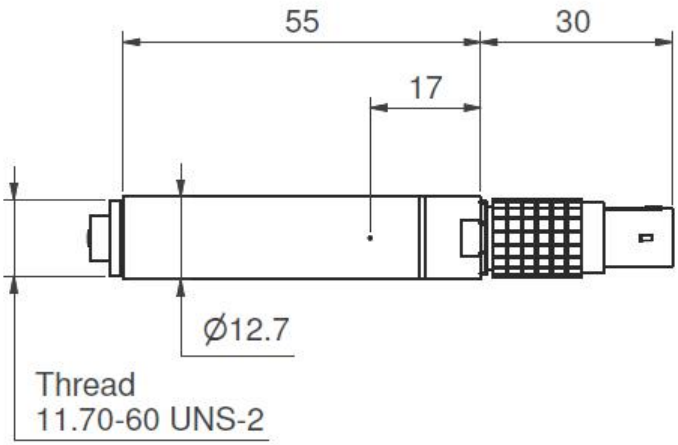

Optional items

GRAS AA0008	3 m LEMO 7-pin - LEMO 7-pin Cable
GRAS AL0008	1/2" Microphone Holder, POM
GRAS AL0012	1/2" Microphone Holder, Stainless Steel
GRAS AL0005	Swivel head
GRAS AL0006	Tripod
GRAS RA0019	Adapter for 1/4" microphone and 1/2" preamplifier
GRAS RA0073	Adapter for 1" microphone and 1/2" preamplifier
GRAS RA0190	Right-angled (90°) Adapter for 1/2" Microphone and 1/2" Preamplifier
GRAS RA0016	20 dB Attenuator for externally polarized 1/2" microphones
GRAS RA0062	20 pF Preamplifier-input Adapter for 1/2" preamplifiers
GRAS 12AA	2-Channel Power Module with gain, filters and SysCheck generator
GRAS 12AQ	2-Channel Universal Power Module with signal conditioning and PC interface

GRAS Sound & Vibration reserves the right to change specifications and accessories without notice.

GRAS Worldwide

Subsidiaries and distributors in more than 40 countries

HEAD OFFICE, DENMARK
GRAS SOUND & VIBRATION
Skovlytoften 33
2840 Holte
Denmark
Tel: +45 4566 4046
www.GRASacoustics.com
gras@grasacoustics.com

USA
GRAS SOUND & VIBRATION
9290 SW Nimbus Avenue
Beaverton, OR 97008
Tel: 503-627-0832
Toll Free: 800-231-7350
www.GRASacoustics.com
sales-usa@grasacoustics.com

UK
GRAS SOUND & VIBRATION
Unit 115, Gibson House,
Ermine Business Park, Huntingdon,
Cambridgeshire, PE29 6XU
Tel: +44 (0)7762 584 202
www.GRASacoustics.com
sales-uk@grasacoustics.com

CHINA
GRAS SOUND & VIBRATION
Room 502, Building T1,
No.1398 Ali Center
Shenchang Road,
Minhang District,
Shanghai, China, 201107
Tel: +86 21 400-888-9826
www.GRASacoustics.cn
cnsales@grasacoustics.com

About GRAS Sound & Vibration

GRAS is a worldwide leader in the sound and vibration industry. We develop and manufacture state-of-the-art measurement microphones to industries where acoustic measuring accuracy and repeatability is of utmost importance in R&D, QA and production. This includes applications and solutions for customers within the fields of aerospace, automotive, audiology, and consumer electronics. GRAS microphones are designed to live up to the high quality, durability and accuracy that our customers have come to expect and trust.

GRAS Sound & Vibration is represented through subsidiaries and distributors in more than 40 countries and is part of Axiometrix Solutions, a leading test solutions provider comprised of globally recognized measurement brands. Read more at www.GRASacoustics.com

www.GRASacoustics.com

GRAS

An Axiometrix Solutions Brand