GRAS RA0428 1/4" MICROPHONE PROTECTION GRID WITH M1,6 THREAD ON TOP

GRAS Sound & Vibration
Skovlytoften 33, 2840 Holte, Denmark
www.grasacoustics.com

1/4" microphone protection grid with M1,6 thread on top

GRAS Sound & Vibration
Skovlytoften 33, 2840 Holte, Denmark
www.grasacoustics.com

Introduction

The GRAS RA0428 is a stainless-steel protection grid designed for 1/4" microphone capsules. It features an M1,6 thread on top, allowing for easy attachment of accessories. This protection grid is included with the 40BI and 40BI-S1 1/4" sound intensity microphone kits. Additionally, it comes with the RA0127 rain protection cap for 1/4" microphones. The RA0427 ensures a secure fit with its 6.35-60 UNS-2 thread, providing reliable attachment to 1/4" microphone capsules.

Quality & Warranty

GRAS accessories are made of stainless steel, alloys and high-quality composites. These items are covered by a 2 year warranty respecting their intended use. On consumables like batteries, cables and windscreen we offer a 6 month warranty.

Dimensions

Dimensions in mm

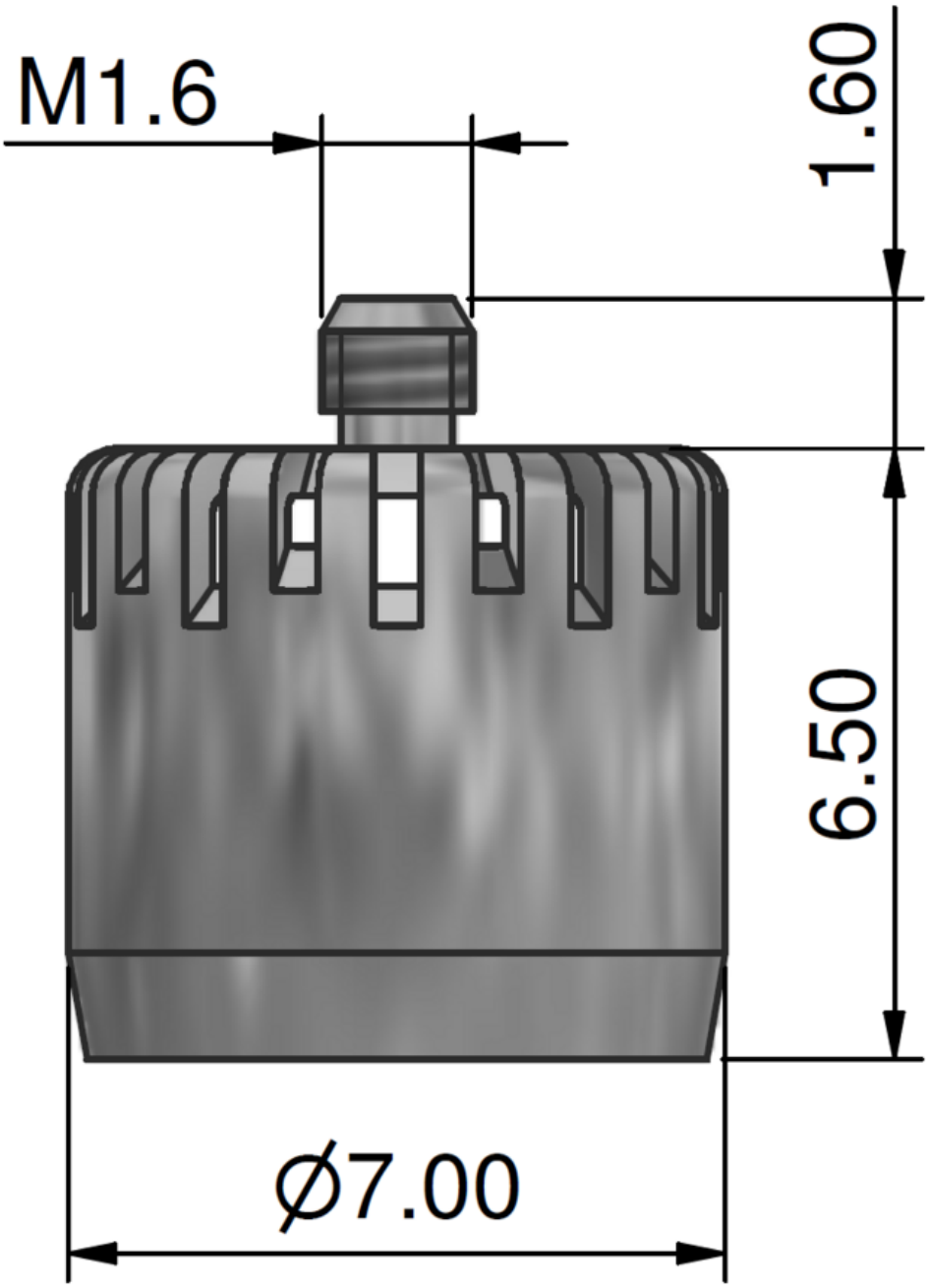

GRAS Worldwide

Subsidiaries and distributors in more than 40 countries

HEAD OFFICE, DENMARK
GRAS SOUND & VIBRATION
Skovlytoften 33
2840 Holte
Denmark
Tel: +45 4566 4046
www.GRASacoustics.com
gras@grasacoustics.com

USA
GRAS SOUND & VIBRATION
9290 SW Nimbus Avenue
Beaverton, OR 97008
Tel: 503-627-0832
Toll Free: 800-231-7350
www.GRASacoustics.com
sales-usa@grasacoustics.com

UK
GRAS SOUND & VIBRATION
Unit 115, Gibson House,
Ermine Business Park, Huntingdon,
Cambridgeshire, PE29 6XU
Tel: +44 (0)7762 584 202
www.GRASacoustics.com
sales-uk@grasacoustics.com

CHINA
GRAS SOUND & VIBRATION
Room 502, Building T1,
No.1398 Ali Center
Shenchang Road,
Minhang District,
Shanghai, China, 201107
Tel: +86 21 400-888-9826
www.GRASacoustics.cn
cnsales@grasacoustics.com

About GRAS Sound & Vibration

GRAS is a worldwide leader in the sound and vibration industry. We develop and manufacture state-of-the-art measurement microphones to industries where acoustic measuring accuracy and repeatability is of utmost importance in R&D, QA and production. This includes applications and solutions for customers within the fields of aerospace, automotive, audiology, and consumer electronics. GRAS microphones are designed to live up to the high quality, durability and accuracy that our customers have come to expect and trust.

GRAS Sound & Vibration is represented through subsidiaries and distributors in more than 40 countries and is part of Axiometrix Solutions, a leading test solutions provider comprised of globally recognized measurement brands. Read more at www.GRASacoustics.com

www.GRASacoustics.com

GRAS

An Axiometrix Solutions Brand