GRAS 46BL-1

1/4" CCP Pressure Standard Microphone Set, High Sensitivity

Freq range: 4 Hz to 20 kHz
Dyn range: 24 dB(A) to 146 dB
Sensitivity: 20 mV/Pa

GRAS 46BL-1 is a high-sensitivity, low-noise ¼ CCP condenser microphone set with rear-venting.

GRAS Sound & Vibration
Skovlytoften 33, 2840 Holte, Denmark
www.grasacoustics.com

GRAS 46BL-1 CCP Pressure Standard Microphone Set, High Sensitivity

Through close cooperation with our customers, we know that data-safety is highly important because the costs related to unsuited and unreliable sensors may determine whether your project turns into a success or not.

GRAS 46BL-1 is an updated version of GRAS 46BL. Concerning the physical considerations of incorporating or replacing GRAS 46BL in existing setups, 46BL-1 is a one-to-one match regarding performance, dimensions, and price; however, 46BL-1 has a slightly lower noise floor and a 180° phase shift.

For our users, data safety translates directly into requests for easier microphone selection, simple system configuration, and reduction of measurement errors. To meet these requirements, we invented the microphone set concept. It is simple, reliable, and robust and consists of a microphone cartridge and preamplifier combination, which is calibrated as one unit. This eliminates errors because there is only one sensitivity value to account for and the risk of contaminating the interface is eliminated. Combine this with our unique and proven design and you have the most reliable measurement microphone sets available in the industry today.

Typical applications and use

46BL-1 is ideally suited for production line testing of portable communication devices, such as cell phones, laptop computers, tablets, GPS receivers, and similar devices using microspeakers.

It is also well suited for general acoustic measurements when high sensitivity and low noise are required. In particular, due to the properties of small microphones (visit the blog post for more information), 46BL-1 excels at in-cabin testing and measurement, and fulfills the recommendations of the Audio Engineering Society (AES) for infotainment system evaluation.

In-car acoustic measurements.

The AES Technical Committee on Automotive Audio [TC-AA] has developed some very useful guidelines for In-car Acoustic measurements in a whitepaper from 2023.
This paper is focused on measurements with microphones in the driver and passenger seat, both on methods and instrumentation.The RA0399 holder is specially designed to meet the specification in the whitepaper.Together with the GRAS 46BC high sensitive microphone (or the high sensitive pressure microphone 46BL-1)set, it fulfills the complete test demands in the white paper.

Find more information on the RA0399 H-shaped holder for 6-unit microphone array

Regarding temperature range, see the specifications. If measurement at higher temperatures is required, a GRAS probe microphone, where the microphone and preamplifier can be isolated from the hot source.

NOTES:

- To achieve optimal performances 46BL-1 must be powered on for at least two minutes before starting a measurement.
- Unlike other CCP microphones, a positive pressure on the 46BL-1 diaphragm generates a negative output voltage.

Compatibility

To perform as specified, the GRAS 46BL-1 microphone set requires a constant current input module that can deliver 4 mA and 24 V unloaded CCP voltage supply. If the constant current supply is

lower, the capability of driving long cables is reduced, and consequently, the upper frequency is reduced. If the voltage supply is lower, it will influence the upper dynamic range.

The microphone set is terminated with a 10/32 Microdot female connector. Ready-to-use coax cable assemblies of various types and lengths are available in standard as well as customized lengths.

The 46BL-1 is IEEE 1451.4 TEDS v. 1.0 compliant. If your measurement platform supports Transducer Electronic Data Sheets, you will be able to read and write data like properties and calibration data.

Calibration

46BL-1 has a diaphragm that is slightly larger in diameter than is standard for ¼ microphones. This does not affect sensitivity calibration, but for frequency calibration using an electrostatic actuator, you need a RA0236 Adapter.

System verification

The functionality of TEDS is very useful to determine which microphone is connected to which input channel. However, it is not a check of whether the microphone is within specifications or not. For daily verification and check of your measurement setup, we therefore recommend using a sound source like the GRAS 42AG Sound Calibrator.

For sensitivity calibration in a lab, we recommend using a reference sound source like the GRAS 42AP Intelligent Pistonphone.

Calibration

When leaving the factory, all GRAS microphones have been calibrated in a controlled laboratory environment using traceable calibration equipment. Depending on the use, measurement environment, and internal quality control programs we recommend that the microphone is recalibrated at least once a year.

We offer two kinds of calibration as an optional after-sales service: GRAS Traceable Calibration and GRAS Accredited Calibration.

GRAS Traceable Calibration is a traceable calibration performed by trained personnel under controlled conditions according to established procedures and standards. This is identical to the rigorous calibration that all GRAS microphones are subjected to as an integral part of our quality assurance.

GRAS Accredited Calibration is performed by the GRAS Accredited Calibration Laboratory that has been accredited in accordance with ISO 17025 by DANAK, the Danish Accreditation Fund.

If you want a new microphone set delivered with an accredited calibration instead of the default factory calibration, specify this when ordering.

Learn more at gras/calib.

Quality and warranty

GRAS microphone sets are made of components from our proven standard portfolio and are all manufactured of high-quality material and branded parts that were chosen and processed to ensure life-long stability and robustness.

All parts are manufactured and assembled at the factory in Denmark by skilled and dedicated operators in a verified clean-room environment. The microphone diaphragm, body, and unique protection grid are made of high-grade stainless steel and make the microphone set resistant to physical damage as well as corrosion caused by aggressive air or gasses.

This, together with the enforced gold-plated microphone terminal, guarantees a highly reliable

connection. Thanks to the high quality, our warranty against defective materials and workmanship is five years.

Service

Should you by mistake damage the diaphragm on a GRAS microphone we will in most cases be able to exchange it at a very reasonable cost and short turn-around time. This not only protects your investment but also meets your quality assurance department since you do not have to worry about new serial numbers etc.

Specifications

Polarization/Connection		0 V / CCP
Frequency range (±1 dB)	Hz	10 to 10 k
Frequency range (±2 dB)	Hz	4 to 20 k
Dynamic range lower limit with GRAS preamplifier	dB(A)	24
Dynamic range upper limit	dB	146
Set sensitivity @ 250 Hz (±2 dB)	mV/Pa	20
Set sensitivity @ 250 Hz (±2 dB)	dB re 1V/Pa	-34
Output impedance	Ω	<50
Output Voltage Swing, min. @ 24-28 V CCP voltage supply	Vp	8
Power supply min. to max.	mA	3.5 to 10
DC bias voltage, typ.	V	14
Microphone venting		Rear
IEC 61094-4 Designation		WS3P
Temperature range, operation	°C / °F	-30 to 85 / -22 to 185
Temperature range, storage	°C / °F	-40 to 85 / -40 to 185
Temperature coefficient @250 Hz	dB/°C / dB/°F	-0.02 / -0.012
Static pressure coefficient @250 Hz	dB/kPa	−0.01 (typical value)
Humidity range non condensing	% RH	0 to 90
Influence of axial vibration @1 m/s²	dB re 20 µPa	60 (typical value)
TEDS (IEEE 1451.4)		27 v. 1.0
Connector type		Microdot 10/32
CE/RoHS compliant/WEEE registered		Yes/Yes/Yes
Weight	g / oz	8 / 0.282
Influence of humidity	dB	<0.1

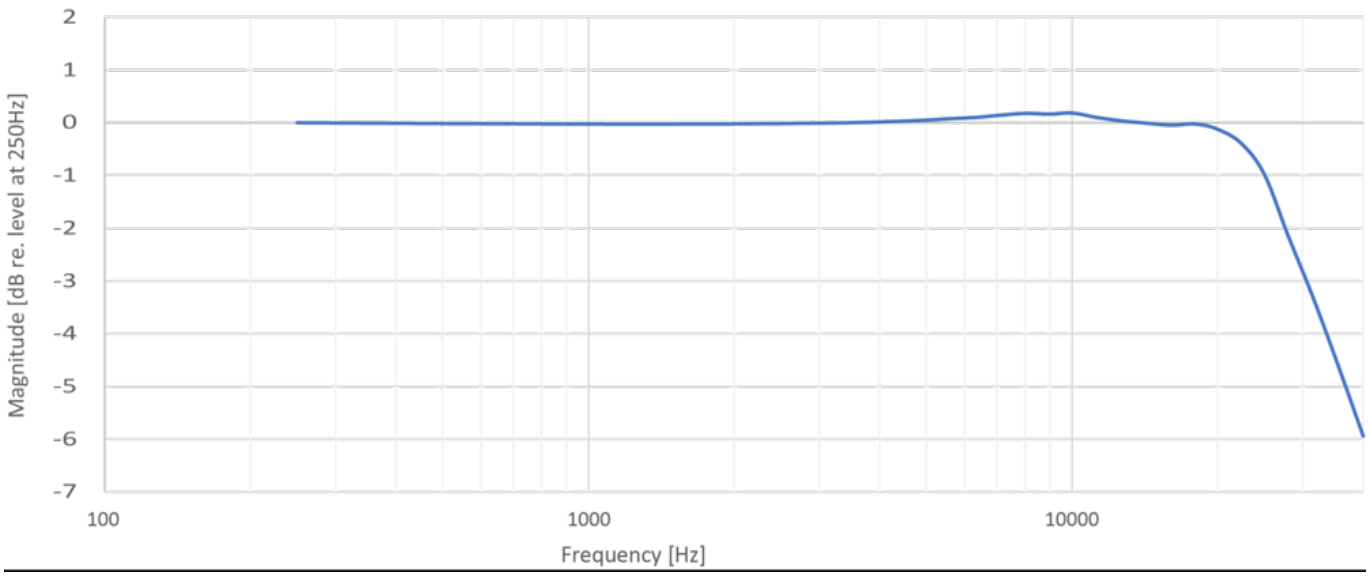

Typical frequency response (without protection grid)

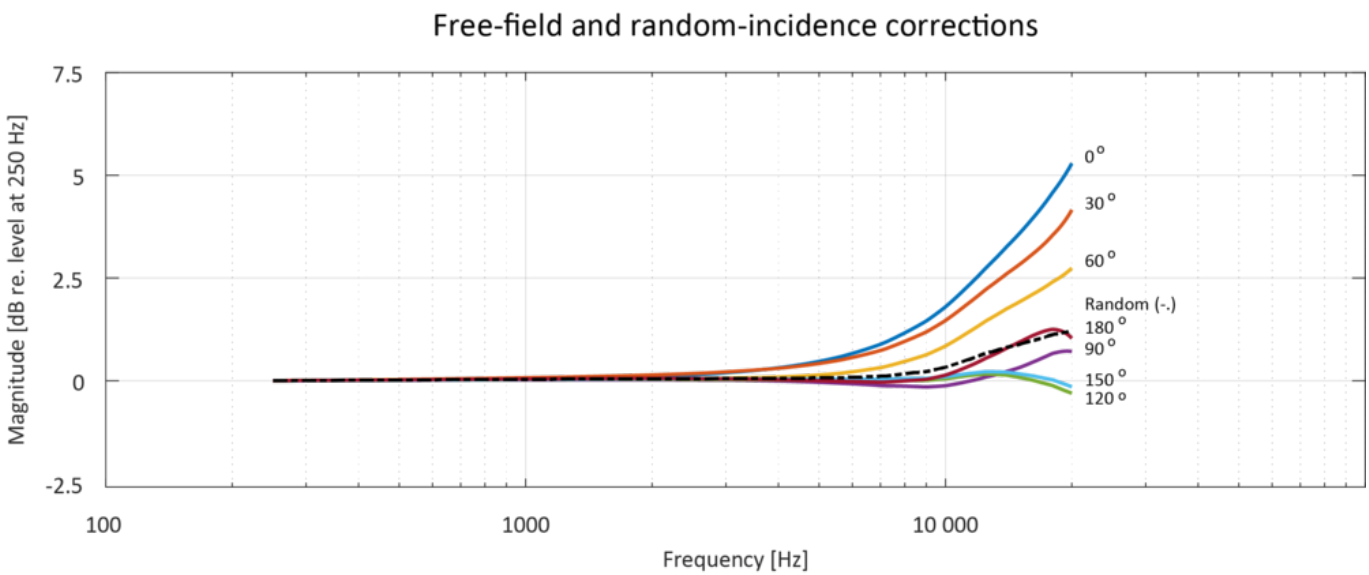

Free-field corrections for different angles of incidence with grid

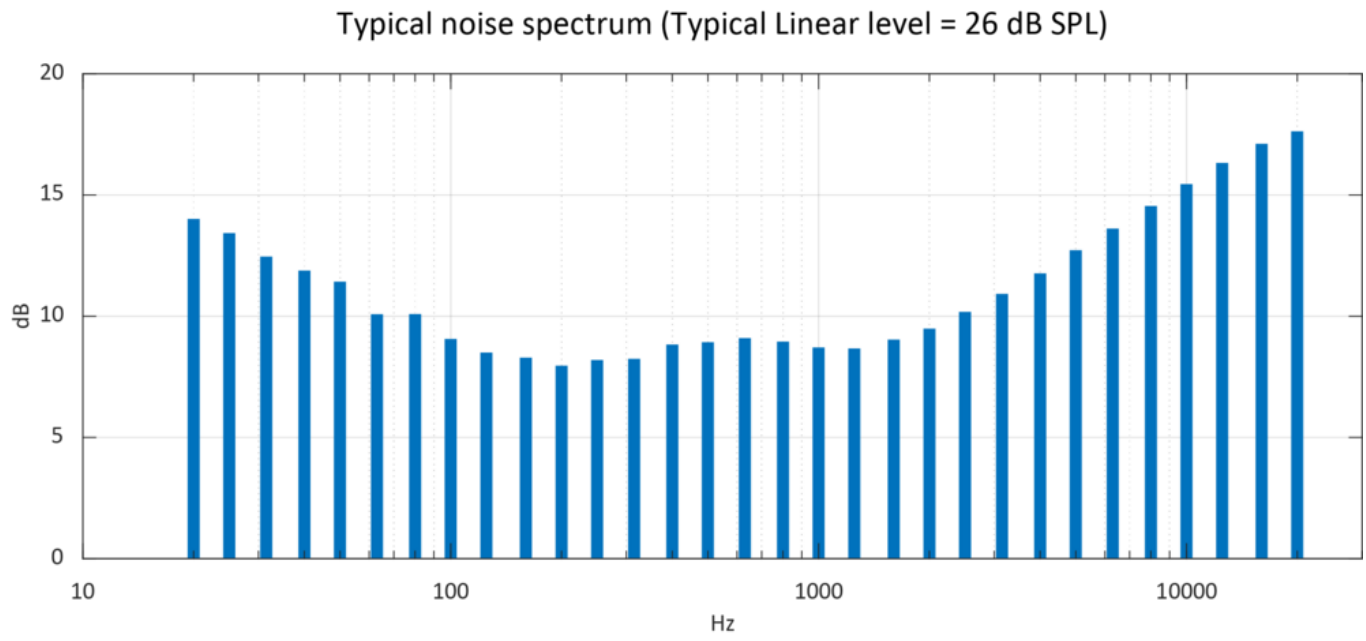

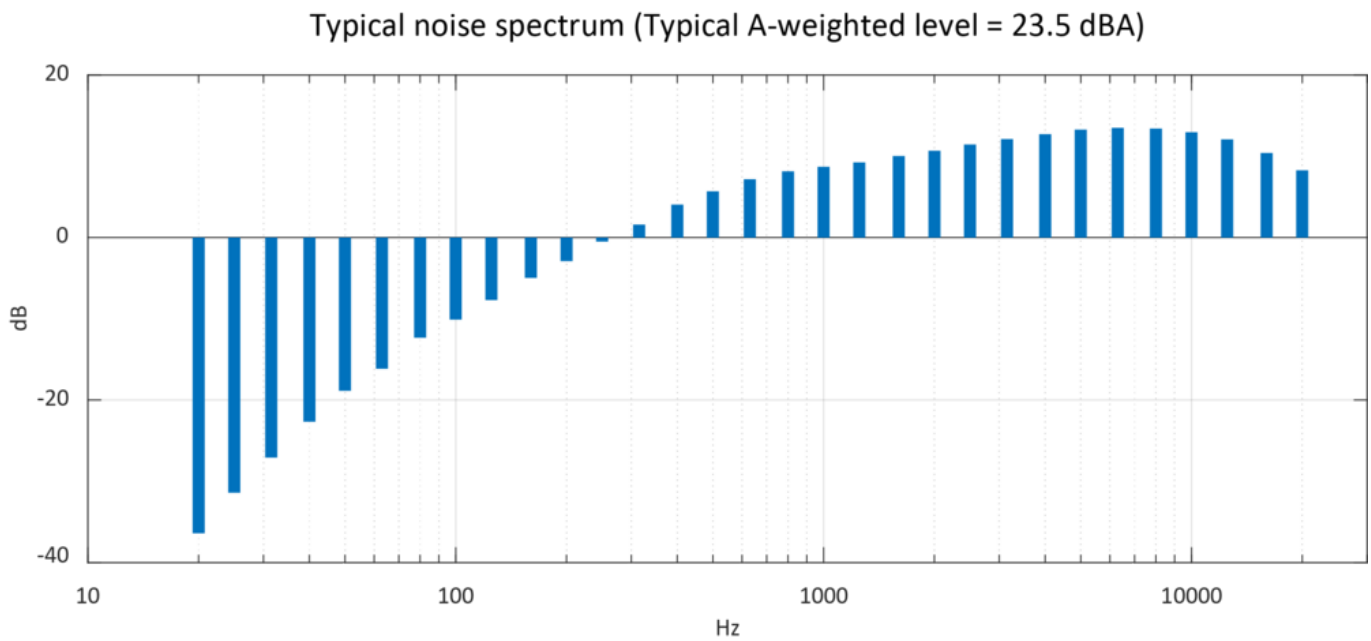

GRAS 46BL-1 self noise

GRAS Sound & Vibration reserves the right to change specifications and accessories without notice.

Dimensions

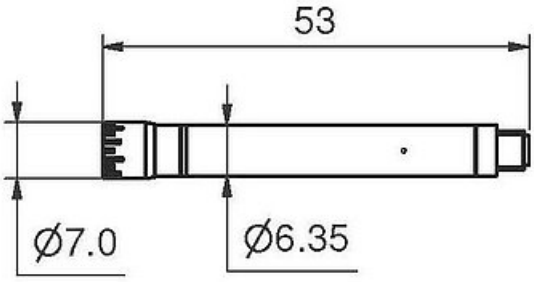

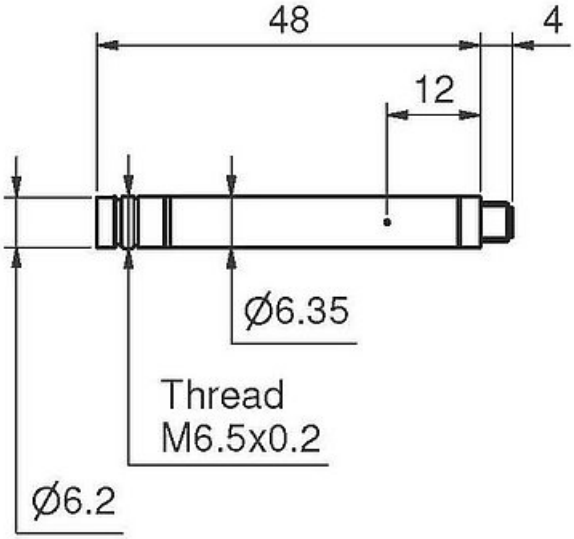

Optional items

GRAS AA0070	3 m Microdot - BNC Cable
GRAS AA0071	5 m Microdot - BNC Cable
GRAS AA0072	10 m Microdot - BNC Cable
GRAS AL0029	¼ Microphone Holder, POM
GRAS AL0013	¼ Microphone Holder, Stainless Steel
GRAS AL0005	Swivel head
GRAS AL0006	Tripod
GRAS AM0071	Windscreen for 1/4" Microphones
GRAS 12BA, BB, and BE	1-, 4- and 2-channel CCP Power Modules
GRAS 42AG	Multifunction Sound Calibrator, Class 1
GRAS 42AP	Intelligent Pistonphone, Class 0
GRAS RA0236	Adapter for frequency calibration of 46BC and 46BL-1
GRAS CA0029	Traceable Calibration of Microphone Set
GRAS CA2301	Accredited Calibration of Microphone Set

GRAS Sound & Vibration reserves the right to change specifications and accessories without notice.

GRAS Worldwide

Subsidiaries and distributors in more than 40 countries

HEAD OFFICE, DENMARK
GRAS SOUND & VIBRATION
Skovlytoften 33
2840 Holte
Denmark
Tel: +45 4566 4046
www.GRASacoustics.com
gras@grasacoustics.com

USA
GRAS SOUND & VIBRATION
9290 SW Nimbus Avenue
Beaverton, OR 97008
Tel: 503-627-0832
Toll Free: 800-231-7350
www.GRASacoustics.com
sales-usa@grasacoustics.com

UK
GRAS SOUND & VIBRATION
Unit 115, Gibson House,
Ermine Business Park, Huntingdon,
Cambridgeshire, PE29 6XU
Tel: +44 (0)7762 584 202
www.GRASacoustics.com
sales-uk@grasacoustics.com

CHINA
GRAS SOUND & VIBRATION
Room 502, Building T1,
No.1398 Ali Center
Shenchang Road,
Minhang District,
Shanghai, China, 201107
Tel: +86 21 400-888-9826
www.GRASacoustics.cn
cnsales@grasacoustics.com

About GRAS Sound & Vibration

GRAS is a worldwide leader in the sound and vibration industry. We develop and manufacture state-of-the-art measurement microphones to industries where acoustic measuring accuracy and repeatability is of utmost importance in R&D, QA and production. This includes applications and solutions for customers within the fields of aerospace, automotive, audiology, and consumer electronics. GRAS microphones are designed to live up to the high quality, durability and accuracy that our customers have come to expect and trust.

GRAS Sound & Vibration is represented through subsidiaries and distributors in more than 40 countries and is part of Axiometrix Solutions, a leading test solutions provider comprised of globally recognized measurement brands. Read more at www.GRASacoustics.com

www.GRASacoustics.com

GRAS

An Axiometrix Solutions Brand