GRAS 12BA, 12BE AND 12BB CCP POWER MODULES WITH TEDS SUPPORT 12BA, 12BE AND 12BB

Microphone power: CCP
Channel(s): 1, 2, or 4
TEDS via USB

12BA, 12BE and 12BB are 1-, 2- and 4-channel CCP power modules, respectively. They have SysCheck2™ and TEDS support and are powered by USB.

GRAS Sound & Vibration
Skovlytoften 33, 2840 Holte, Denmark
www.grasacoustics.com

Technology

The GRAS 12BA, 12BE and 12BB are, respectively, single- two- and four-channel USB-powered CCP power modules with TEDS support, and they are able to take full advantage of GRAS SysCheck2™-enabled microphones, such as GRAS 246AE.

These power modules provide power to microphone sets without signal degradation, gain modification, or attenuation.

This series excels as a simple and cost-effective interface between TEDS-enabled measurement microphones and any Audio Precision APx series analyzer, which will automatically extract TEDS data for seamless integration. Full

SysCheck2™ functionality is also automatically available when connected to APx500 release v7.0 Measurement Software with GRAS 12BA, 12BE, or 12BB power modules and an Audio Precision APx series analyzer, or with an Audio Precision APx series analyzer with CCP and TEDS read capability.

However, these power modules can also be used with other brands. In this case, a TEDS utility program provides access to TEDS data on a PC. Download TEDS utility program here. The SysCheck2 Software Development Kit is available from the microphone product pages.

Power for the 12Bx series is provided through a USB cable using a USB 2.0 or USB 3.0 port and a USB-C port on the power module.

If more channels are needed, multiple power modules can be used concurrently.

Specifications

Frequency response (±0.06 dB) (with 100 kΩ load)	Hz	10 to 20
Frequency response (±0.03 dB) (with 100 kΩ load)	Hz	20 - 200k
Inherent noise, input shortet, 10 Hz - 20kHz	µVrms	2
Overload indication		No
Temperature range, operation	°C / °F	0 to +45 / 32 to 1113
Temperature range, storage	°C / °F	-40 to +75 / -40 to 167
Humidity (non-condensing)	%	max. 90
Dimension including mounting ears (WxHxD)	mm / "	108 x 44.2 x 178.3 / 4.35 x 1.74 x 7.02
Channels, 12BA		1
Channels, 12BE		2
Channels, 12BB		4
CCP preamplifier supply @ +24 V	mA	4
Max input Voltage	Vp	24
USB		C
USB Power + 5 Vdc	A	0.5
Weight 12BA, 1 Ch	g / oz	397 / 14.0
Weight 12BE, 2 Ch	g / oz	425 / 18.0
Weight 12BB, 4 Ch	g / oz	494 / 15.3

Dimensions

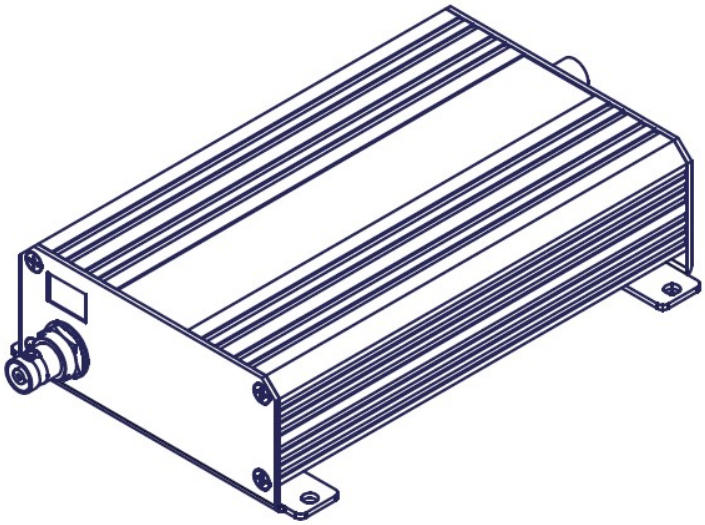

Dimensions

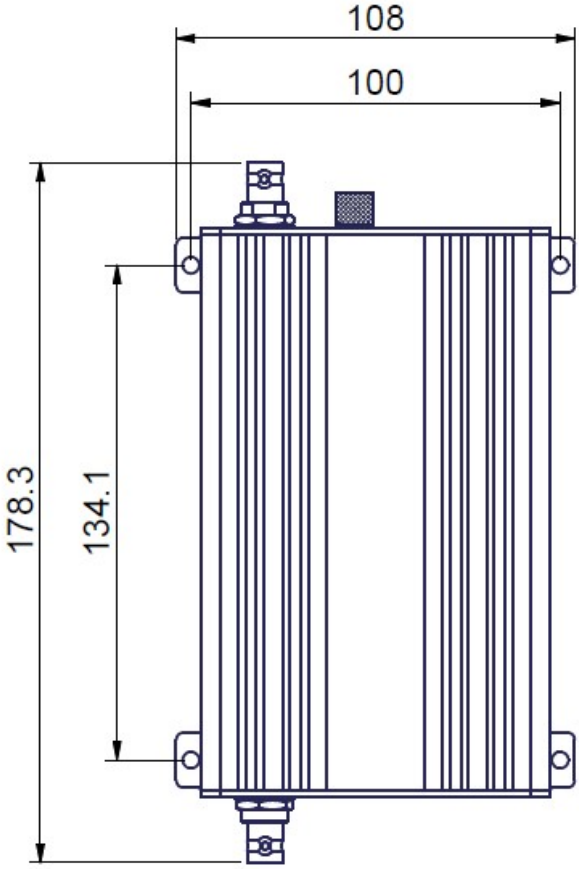

Ordering info

Included

GRAS 12BA, 12BE or 12BB	CCP Power Module with USB Connection
-	USB Cable

Optional

GRAS AA0033	BNC-BNC cable, 1 meter
GRAS AA0034	BNC-BNC cable, 2 meters
GRAS AA0035	BNC-BNC cable, 3 meters

GRAS Worldwide

Subsidiaries and distributors in more than 40 countries

HEAD OFFICE, DENMARK
GRAS SOUND & VIBRATION
Skovlytoften 33
2840 Holte
Denmark
Tel: +45 4566 4046
www.GRASacoustics.com
gras@grasacoustics.com

USA
GRAS SOUND & VIBRATION
9290 SW Nimbus Avenue
Beaverton, OR 97008
Tel: 503-627-0832
Toll Free: 800-231-7350
www.GRASacoustics.com
sales-usa@grasacoustics.com

UK
GRAS SOUND & VIBRATION
Unit 115, Gibson House,
Ermine Business Park, Huntingdon,
Cambridgeshire, PE29 6XU
Tel: +44 (0)7762 584 202
www.GRASacoustics.com
sales-uk@grasacoustics.com

CHINA
GRAS SOUND & VIBRATION
Room 502, Building T1,
No.1398 Ali Center
Shenchang Road,
Minhang District,
Shanghai, China, 201107
Tel: +86 21 400-888-9826
www.GRASacoustics.cn
cnsales@grasacoustics.com

About GRAS Sound & Vibration

GRAS is a worldwide leader in the sound and vibration industry. We develop and manufacture state-of-the-art measurement microphones to industries where acoustic measuring accuracy and repeatability is of utmost importance in R&D, QA and production. This includes applications and solutions for customers within the fields of aerospace, automotive, audiology, and consumer electronics. GRAS microphones are designed to live up to the high quality, durability and accuracy that our customers have come to expect and trust.

GRAS Sound & Vibration is represented through subsidiaries and distributors in more than 40 countries and is part of Axiometrix Solutions, a leading test solutions provider comprised of globally recognized measurement brands. Read more at www.GRASacoustics.com

www.GRASacoustics.com

GRAS

An Axiometrix Solutions Brand