GRAS 246AE

1/2" CCP Free-field Standard SysCheck2™ Microphone Set

Freq range: 3.15 Hz to 20 kHz
Dyn range: 17 dB(A) to 138 dB
Sensitivity: 50 mV/Pa
IEC 61672 Class 1
Use: For general acoustic testing—
SysCheck2-enabled measurement chains

GRAS 246AE is a ½ Constant Current Power (CCP) free-field microphone set with SysCheck2™ and is optimized for all acoustic applications, where the location of the main sound source is known and the microphone can be pointed directly at it ensuring 0° incidence. It is terminated with a BNC connector and is TEDS compatible.

GRAS Sound & Vibration
Skovlytoften 33, 2840 Holte, Denmark
www.grasacoustics.com

Introduction

GRAS 246AE with SysCheck2™ is a ½ free-field microphone set and, as such, is optimized for all acoustic applications where the location of the main sound source is known and the microphone can be pointed directly at it ensuring 0° incidence.

GRAS 246AE is a variant of 46AE that contains SysCheck2 functionality, making it ideal for general acoustic testing and conforms with IEC 61094 WS2F and IEC 61672 Class 1.

SysCheck2 functionality can be accessed with many data acquisition systems, but offers seamless plug-and-play operation with Audio Precision's APx data acquisition software.

SysCheck2 and TEDS

Verification with SysCheck2*
SysCheck2 is a GRAS-patented technology for verifying measurement chain integrity. This verification tool performs remote health check on microphones, channel gain and cable integrity. The verifications are made on each SysCheck2-enabled microphone connected to a CCP power module with transducer electronic data sheet (TEDS) support and measurement software with one click. SysCheck2-enabled microphones also provide on-demand environmental data (temperature, barometric pressure and humidity). SysCheck2 functionality is particularly convenient when the microphones are placed where physical verification is a risk (for example, if the microphones are hidden in complex mechanical structures, such as couplers or specialized test boxes on production lines), the locations are difficult or dangerous to reach, or if used in a distributed measurement where there are many microphones spread out over a large area.

SysCheck2 microphones are equipped with an ultra-low power microcontroller located in the microphone preamplifier. This microcontroller is able to produce a reference signal that can be compared to a reference measurement to determine the measurement chain status. Changes in microphone or cable capacitance, channel gain or the unexpected use of a filter will result in a measurement deviation and will be reflected in a change in the output from the measurement channel. Once detected, the problem can be examined and then rectified.

The microphone can be set to display visual cues to the health of the measurement chain and can be used for the easy identification of specific microphones. In the evaluation of measurement-chain health, SysCheck2 can detect microphone sensitivity or channel gain changes greater than 0.3 dB. Additionally, the microphone acquires data on local environmental conditons, including temperature, pressure and humidity. This data can help with the tracability of acquired data and help refine testing to reduce the number of erroneous pass-fail results on a production line.

Full SysCheck2 functionality is ready for use out of the box when connected to compatible AP and Siemens setups. AP setups can be comprised of APx 500 Measurement Software with GRAS 12BA, 12BB or 12BE power modules and an Audio Precision APx series analyzer or with an Audio Precision APx series analyzer with CCP and TEDS read/write capability. Siemens setups require Siemens Simcenter Testlab Signature Acquisition with a 12Bx or similar power module and analyzer combination with CCP and TEDS read/write capability.

However, all features are accessible with a suitable CCP-based power module, analyzer and data acquisition system after setup with the GRAS-supplied software developement kit (SDK) or our SDK and an application programming interface (API), depending on your system.

System verification with TEDS
TEDS is very useful to determine which microphone is connected to which input channel and contains relevant information needed by SysCheck2 and other tools used for measurement setup and verification. However, it is not by itself a check of whether the microphone is within specifications or not.

Design

GRAS 246AE is a high-performance ½ free-field microphone set for measuring medium sound pressure levels. In our clean-room environment, the set is assembled and sealed with a label.

SysCheck2 microphones also have three RGB LEDs built into the microphone to provide a convenient visual aid for locating a measurement channel.

Microphone
The microphone cartridge is the high-quality IEC 61094 WS2F standardized GRAS 40AE ½ Prepolarized Free-field Microphone, designed for long-term reliability in multiple environments. The high sensitivity and reliability have made 40AE the preferred measurement microphone for sound level meters/analyzers with CCP-option and, as such, enables IEC 61672 Class 1 measurements.

The prepolarization is obtained through an electret that is inflicted on the microphone back-plate under highly controlled conditions. The electret is then charged to match the specified microphone sensitivity.

Preamplifier
The preamplifier is a SysCheck2-based evolution of the GRAS 26CA ½ CCP Standard Preamplifier with BNC connector and based on our well-known circuit board substrates. In the industry, these are famous for their low self-noise, wide frequency range, and excellent slew rate performance.

Compatibility

To perform as specified, the GRAS 246AE microphone set requires a constant current input module that can deliver 4 mA and 24 V unloaded CCP voltage supply. If the constant current supply is lower, the capability of driving long cables is reduced and consequently the upper frequency is reduced. If the voltage supply is lower it will influence the upper dynamic range.

The microphone set is terminated with a BNC connector. Ready to use coax cable assemblies of various types and lengths are available in standard as well as customized lengths.

The 246AE is delivered with Generation II TEDS. The calibration data is programmed into the built-in TEDS according to IEEE 1451.4 using UDID I27-0-0-0U. If your measurement platform is TEDS compatable, you will be able to read and write data such as properties and calibration data.

Generation II TEDS chip (DS2431) may require updated system software.

Calibration

When leaving the factory, all GRAS microphones have been calibrated in a controlled laboratory environment using traceable calibration equipment. Depending on the use, measurement environment and internal quality control programs we recommend that the microphone is recalibrated at least once a year.

Two kinds of calibration are offered as optional after-sales service: GRAS Traceable Calibration and GRAS Accredited Calibration.

GRAS Traceable Calibration is a traceable calibration performed by trained personnel under controlled conditions according to established procedures and standards. This is identical to the rigorous

calibration that all GRAS microphones are subjected to as an integral part of our quality assurance.

GRAS Accredited Calibration is performed by the GRAS Accredited Calibration Laboratory that has been accredited in accordance with ISO 17025 by DANAK, the Danish Accreditation Fund.

If you want a new microphone set delivered with an accredited calibration instead of the default factory calibration, specify this when ordering.

For subsequent, needed acoustic verification and checks of your measurement setup, we recommend using a sound source like the GRAS 42AG Sound Calibrator. For sensitivity calibration we recommend using a reference sound source like the GRAS 42AP Intelligent Pistonphone.

Learn more at calibration.

GRAS HALT

When our R&D team develops a measurement microphone, it must undergo the most demanding tests to prove that it can withstand our customers' daily test conditions. Using a series of highly accelerated lifetime tests (HALT) we ensure that our microphones live up to the high quality and precision that our customers have come to expect and trust. Our HALT tests actively accelerate the lifetime of a microphone by simulating the handling and use it is exposed to in real-life situations.

For more about HALT, see HALT Stress Testing.

Quality and warranty

GRAS microphone sets are made of components from our proven standard portfolio and are all manufactured of high-quality material and branded parts that were chosen and processed to ensure life-long stability and robustness.

All parts are manufactured and assembled at the factory in Denmark by skilled and dedicated operators in a verified clean-room environment. The microphone diaphragm, body and unique protection grid are made of high-grade stainless steel and make the microphone set resistant to physical damage as well as corrosion caused by aggressive air or gasses.

This, together with the enforced gold-plated microphone terminal guarantees a highly reliable connection. Thanks to the high quality, our warranty against defective materials and workmanship is five years.

Service

Should you by mistake damage the diaphragm on a GRAS microphone we will in most cases be able to exchange it at a very reasonable cost and short turn-around time. This not only protects your investment but also meets your quality assurance department since you do not have to worry about new serial numbers, etc.

---

* **NOTE:** SysCheck2 is a verification tool, not a calibration tool. SysCheck2 cannot be used to correct microphone sensitivity. While SysCheck2 has the ability to detect small variations in the complete measurement chain from the acquisition hardware to the microphone diaphragm, it cannot detect unexpected physical changes in the vicinity of the microphone (like a forgotten calibrator covering the microphone cartridge). SysCheck2 cannot detect errors due to unlikely scenarios with errors coming from multiple sources that add up and cancel each other out. Jump back to footnote * in the text

Specifications

Polarization/Connection		0 V / CCP
Frequency range (±1 dB)	Hz	5 to 10 k
Frequency range (±2 dB)	Hz	3.15 to 20 k
Dynamic range lower limit with GRAS preamplifier	dB(A)	17
Dynamic range upper limit with GRAS preamplifier	dB	138
Set sensitivity @ 250 Hz (±2 dB)	mV/Pa	50
Set sensitivity @ 250 Hz (±2 dB)	dB re 1V/Pa	-26
Output impedance	Ω	< 50
Output Voltage Swing, min. @ 24-28 V CCP voltage supply	Vp	8
Power supply min. to max.	mA	2 to 20*
DC bias voltage, typ.	V	13
Microphone venting		Rear
IEC 61094-4 Designation		WS2F
Temperature range, operation	°C / °F	-30 to 85 / -22 to 185<-sup>†‡</sup>
Temperature range, storage	°C / °F	-40 to 85 / -40 to 185
Temperature coefficient @250 Hz	dB/°C / dB/°F	-0.01 / -0.006
Static pressure coefficient @250 Hz	dB/kPa	-0.01
Humidity range non condensing	% RH	10 to 90
Humidity coefficient @250 Hz	dB/% RH	-0.001 (10–90%)
Influence of axial vibration @1 m/s²	dB re 20 µPa	66
TEDS UDID (IEEE 1451.4)		I27-0-0-0U
Connector type		BNC
CE/RoHS compliant/WEEE registered		Yes/Yes/Yes
Weight	g / oz	33 / 1.164
SysCheck2 resolution**	dB	0.3

* At temperatures below –10°C / 14°F use at least 4 mA for full functionality of SysCheck2.
† If used at temperatures higher than 70°C / 158°F, use high-temperature cables.
‡ SysCheck2 functional temperature range is between –20°C / -4°F and 65°C / 149°F.
** Requires an ambient noise level less than 65 dBSPL.

GRAS HALT Test Parameters††

Humidity 90%	@50°C / 122°F	48 hours
Drop horizontal orientation of microphone, attached to 2 kg load	m	1
Drop vertical, grid downwards	m	1
Vibration horizontal and vertical	@8 g	15 hours

†† For a short introduction to HALT, see the section "GRAS HALT" above.

Environmental sensor data accuracy (operational from -40 to 85°C / -40 to 185°F)‡‡

Temperature	±2°C / 3.6°F	from 0 to 65°C / 32 to 149°F
Pressure, static	±1.5 hPa	from 0 to 65°C / 32 to 149°F and 300 to 1100 hPa
Relative humidity	±4%	from 0 to 65°C / 32 to 149°F

‡‡ This temperature range is solely for the functionality of the environmental data acquisition. This table provides the temperature ranges where the stated accuracy is guaranteed. For example, if the SysCheck2-stated temperature falls below the microphones operational temperarure limit, it may not have the stated accuracy, but should still be confirmed.

Test conditions

Temperature: 20°C / 64°F
Pressure: 760 mm

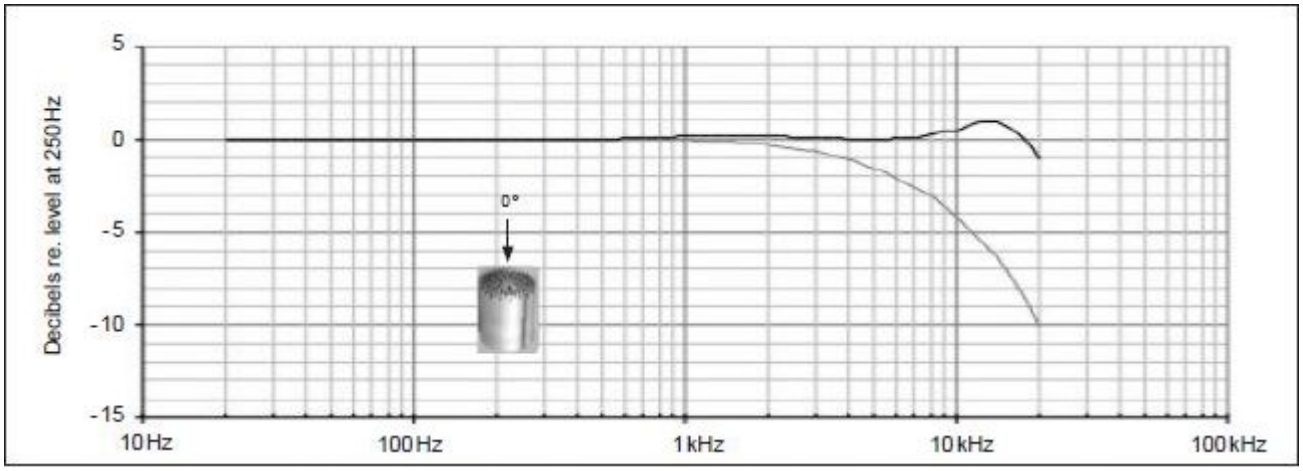

Typical frequency response. Upper curve shows free-field response for 0°, lower curve shows pressure response.

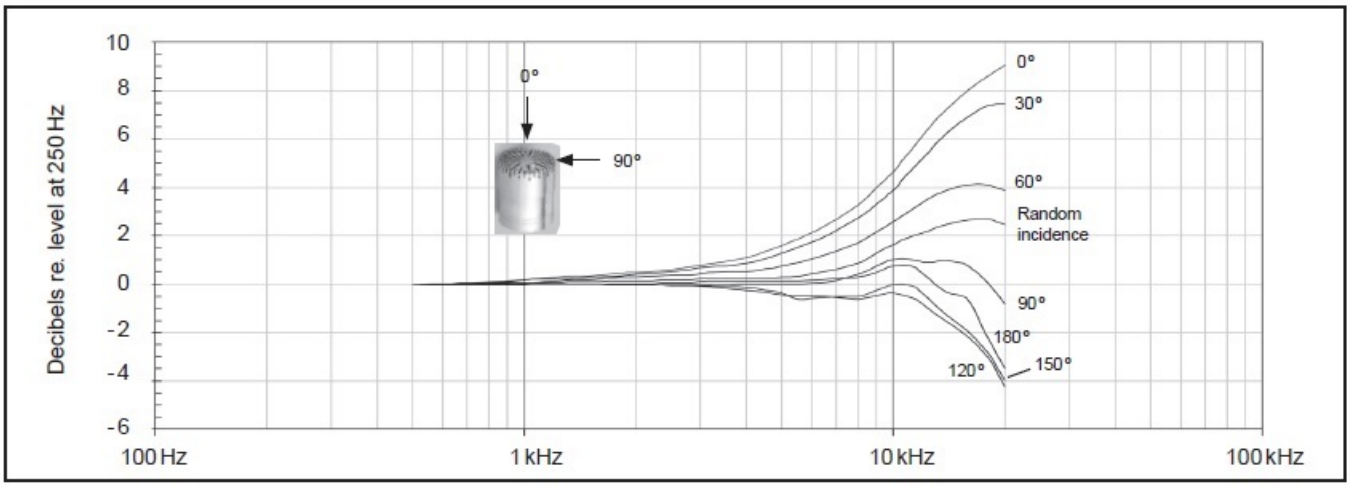

Free-field corrections for different angles of incidence

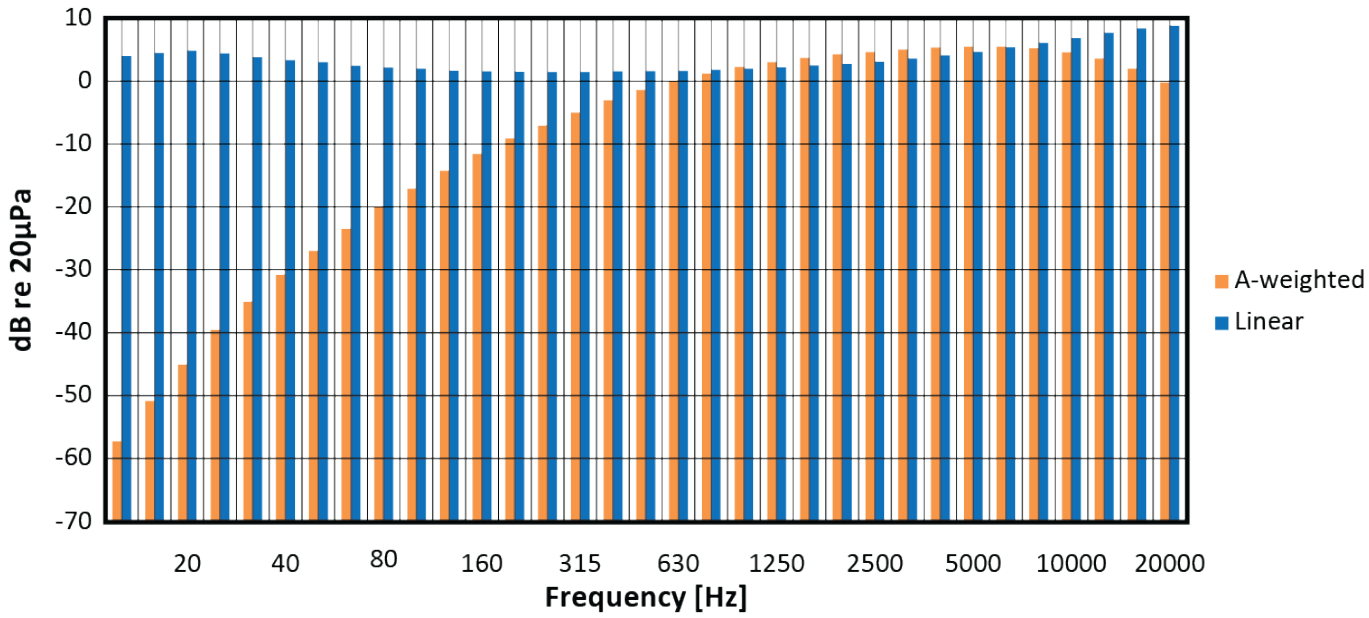

Typical noise floor in dB shown in 1/3-octave bands—linear and A-weighted.

GRAS Sound & Vibration reserves the right to change specifications without notice.

Dimensions

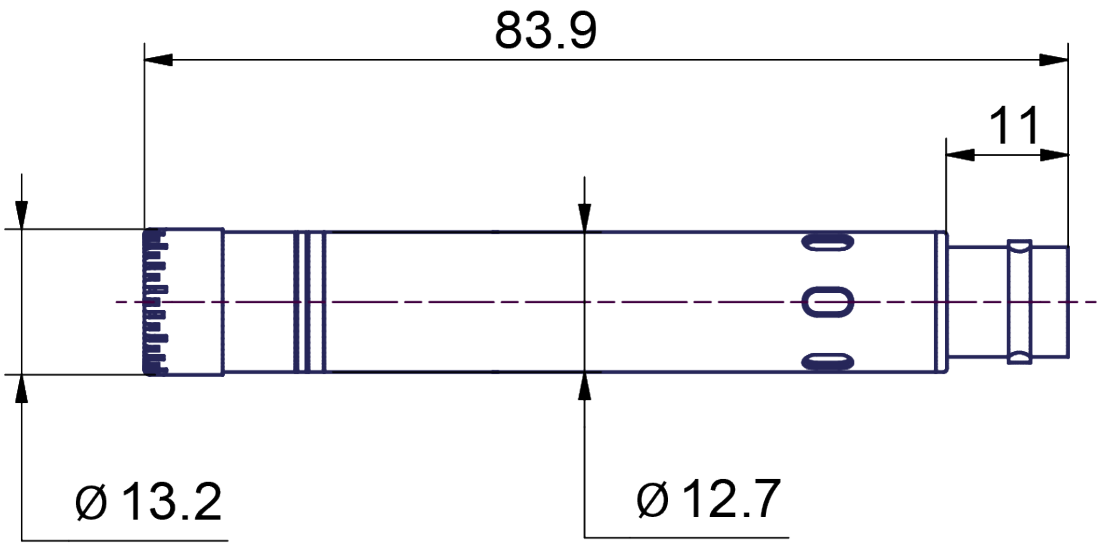

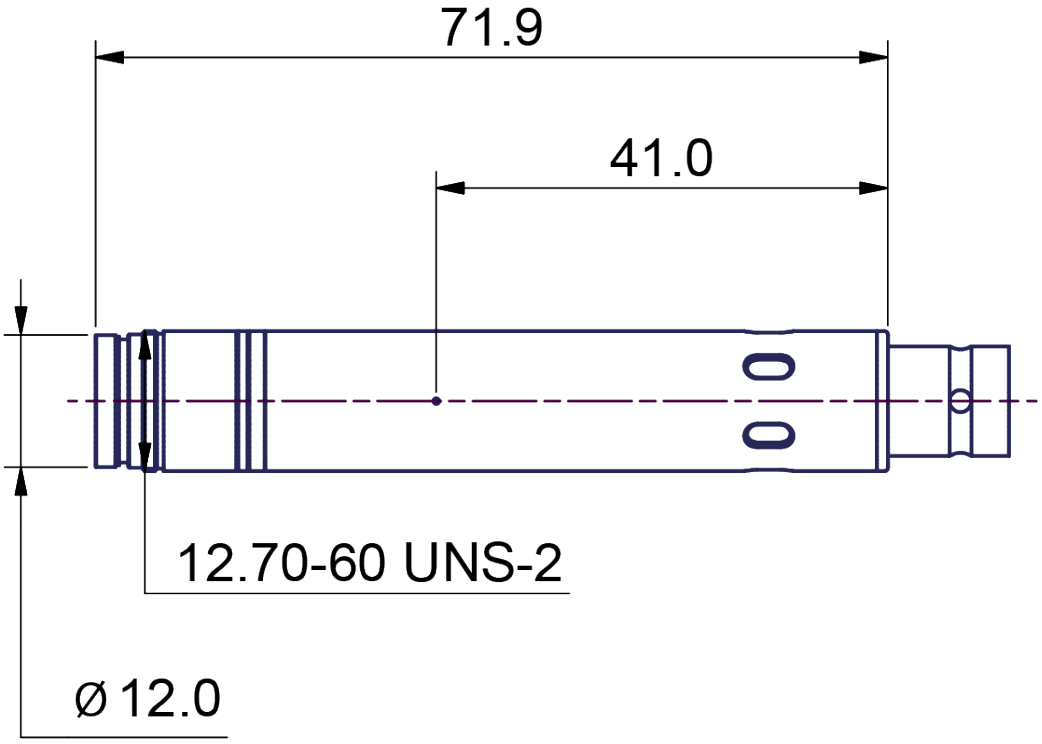

GRAS 246AE	½ CCP Free-field Standard SysCheck2 Microphone Set. This is the "standard" rear-vented version.

Optional items

GRAS RA0122	Random-incidence Corrector
GRAS AA0035	3 m BNC - BNC Cable
GRAS AL0008	½ Microphone Holder, POM
GRAS AL0012	½ Microphone Holder, Stainless Steel
GRAS AL0005	Swivel head
GRAS AL0006	Tripod
GRAS RA0020	½ Nosecone
GRAS AM0069	Windscreen for ½ Microphones
GRAS RA0131	½ Rain protection cap
GRAS 12BA	1-channel CCP Power Module with TEDS support
GRAS 12BB	4-channel CCP Power Module with TEDS support
GRAS 42AG	Multifunction Sound Calibrator, Class 1
GRAS 42AP	Intelligent Pistonphone, Class 0
GRAS CA0029	Traceable Calibration of Microphone Set
GRAS CA2301	Accredited Calibration of Microphone Set

GRAS Sound & Vibration reserves the right to change accessories without notice.

GRAS Worldwide

Subsidiaries and distributors in more than 40 countries

HEAD OFFICE, DENMARK
GRAS SOUND & VIBRATION
Skovlytoften 33
2840 Holte
Denmark
Tel: +45 4566 4046
www.GRASacoustics.com
gras@grasacoustics.com

USA
GRAS SOUND & VIBRATION
9290 SW Nimbus Avenue
Beaverton, OR 97008
Tel: 503-627-0832
Toll Free: 800-231-7350
www.GRASacoustics.com
sales-usa@grasacoustics.com

UK
GRAS SOUND & VIBRATION
Unit 115, Gibson House,
Ermine Business Park, Huntingdon,
Cambridgeshire, PE29 6XU
Tel: +44 (0)7762 584 202
www.GRASacoustics.com
sales-uk@grasacoustics.com

CHINA
GRAS SOUND & VIBRATION
Room 502, Building T1,
No.1398 Ali Center
Shenchang Road,
Minhang District,
Shanghai, China, 201107
Tel: +86 21 400-888-9826
www.GRASacoustics.cn
cnsales@grasacoustics.com

About GRAS Sound & Vibration

GRAS is a worldwide leader in the sound and vibration industry. We develop and manufacture state-of-the-art measurement microphones to industries where acoustic measuring accuracy and repeatability is of utmost importance in R&D, QA and production. This includes applications and solutions for customers within the fields of aerospace, automotive, audiology, and consumer electronics. GRAS microphones are designed to live up to the high quality, durability and accuracy that our customers have come to expect and trust.

GRAS Sound & Vibration is represented through subsidiaries and distributors in more than 40 countries and is part of Axiometrix Solutions, a leading test solutions provider comprised of globally recognized measurement brands. Read more at www.GRASacoustics.com

www.GRASacoustics.com

GRAS

An Axiometrix Solutions Brand