GRAS KB5002

Right Anthropometric Pinna 35 Shore 00

- Anatomically shaped concha and ear canal
- Improved fit and repeatability
- Outer pinna with improved collapsibility
- Resilient mounting
- It is a mirrored copy of the KB5001 left pinna

The KB5002 is a large right-side anthropometric pinna designed for use with the 45BB/45BC KEMAR or 43AG, enabling accurate and repeatable testing of headphones and earphones. KB5002 concha and ear canal are a mirrored copy of the KB5001 pinna; while maintaining the right pinna base thickness so it fits the mentioned GRAS test fixtures. It has anatomically correct ear-entrance and ear-canal with correct soft ear helix and provides perfect sealing and insertion accuracy for headphones and earphones. The hardness is 35 Shore 00.

The pinna is supplied with the following accessories:

- 2x SK6012 finger screws for mounting on the 45BB/45BC KEMAR or 43AG
- 1x RA0517 kit including the GR1874 holder ring
- 1x YY028 3 mm Allen key

GRAS Sound & Vibration
Skovlytoften 33, 2840 Holte, Denmark
www.grasacoustics.com

KB5002 is a right pinna with anthropometric concha and ear canal for KEMAR. It is made of soft silicone, 35 Shore 00 hardness. It is a mirrored copy of the KB5001 (left) pinna.

The KB5002 is a right-side pinna featuring an anthropometric concha and ear canal, designed for use with the GRAS 45BB and 45BC KEMAR, or the 43AG test fixture. It is crafted from soft silicone with a hardness of 35 Shore 00. It is a mirrored copy of the KB5001 left pinna in terms of the concha and ear canal's shape and size.

Below it is possible to see examples of the anthropometric pinna in use:

GRAS anthropometric pinna mounted on a 711-style (IEC 60318-4) ear simulator using the RA0517 kit with GR1874 holder ring:

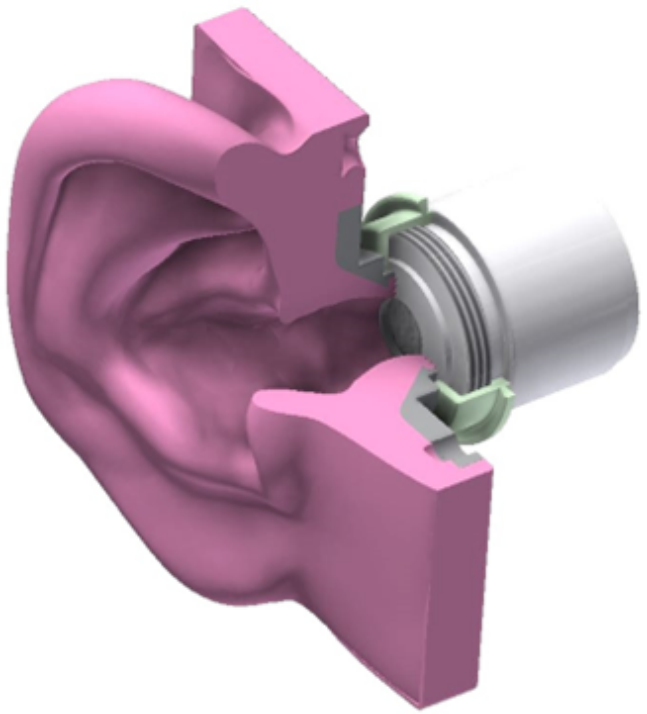

GRAS Anthropometric pinna mounted on a 45BB/45BC KEMAR using the RA0517 kit and finger screws (both included with the anthropometric pinna):

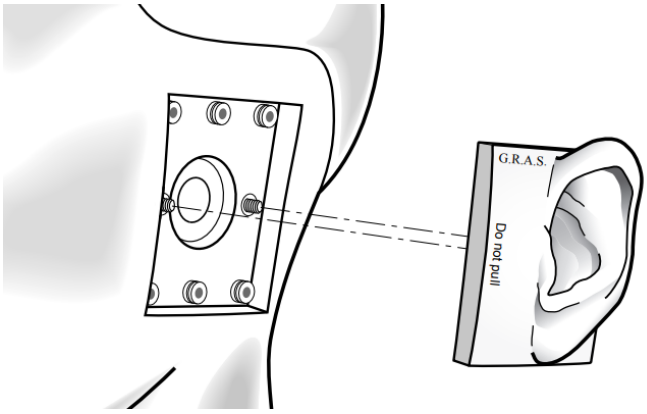

GRAS anthropometric pinna mounted on the 43AG test fixture's cheek plate using the RA0517 kit and finger screws (both included with the anthropometric pinna):

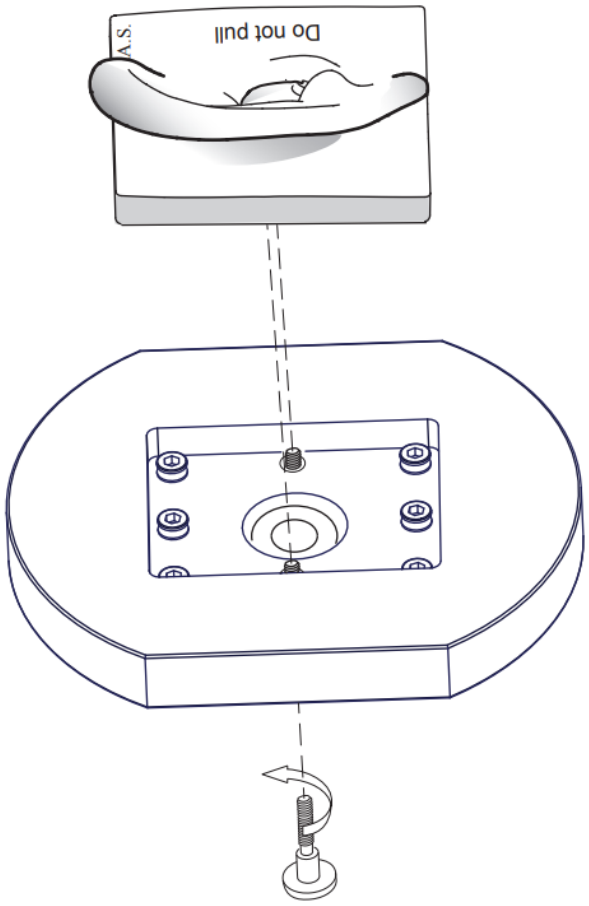

Technology

The external shape of the pinna is identical to that of the standardized KEMAR pinna, but concha and canal have been modified so that they closely mimic the properties of a real human ear. The ear canal has been extended and is an integral part of the pinna that now seals directly against the ear simulator. Like the human ear, the ear canal now has the 1st and 2nd bend, and the interface with the concha is oval.

This shape makes it possible to achieve good insertion accuracy and sealing with anatomically shaped in-ear transducers such as ear-bud headphones, in-ear hearing protectors, and insert hearing aids. Controlling the insertion depth is easy, leading to better insertion consistency and improved repeatability of measurements. The better fit and seal also means that the low frequency response is improved. It will allow you to reproduce base response, as well as effectively measure (active & passive) attenuation.

The outer pinna has the same shape as the standardized pinna, but the flexibility has been improved to better mimic the way the human ear collapses when supra-aural and circum-aural earphones are mounted. When measuring the frequency response of these types of headphones, more reliable and repeatable measurements can be achieved because of the improved collapsibility of the pinna.

The pinna is screwed onto the ear simulator which in turn is fixed with screws that ensure that the pinna is held firmly in place. Therefore, the mounting is very stable, and it is possible to mount and dismount DUTs repeatedly without compromising the seal.

GRAS Worldwide

Subsidiaries and distributors in more than 40 countries

HEAD OFFICE, DENMARK
GRAS SOUND & VIBRATION
Skovlytoften 33
2840 Holte
Denmark
Tel: +45 4566 4046
www.GRASacoustics.com
gras@grasacoustics.com

USA
GRAS SOUND & VIBRATION
9290 SW Nimbus Avenue
Beaverton, OR 97008
Tel: 503-627-0832
Toll Free: 800-231-7350
www.GRASacoustics.com
sales-usa@grasacoustics.com

UK
GRAS SOUND & VIBRATION
Unit 115, Gibson House,
Ermine Business Park, Huntingdon,
Cambridgeshire, PE29 6XU
Tel: +44 (0)7762 584 202
www.GRASacoustics.com
sales-uk@grasacoustics.com

CHINA
GRAS SOUND & VIBRATION
Room 502, Building T1,
No.1398 Ali Center
Shenchang Road,
Minhang District,
Shanghai, China, 201107
Tel: +86 21 400-888-9826
www.GRASacoustics.cn
cnsales@grasacoustics.com

About GRAS Sound & Vibration

GRAS is a worldwide leader in the sound and vibration industry. We develop and manufacture state-of-the-art measurement microphones to industries where acoustic measuring accuracy and repeatability is of utmost importance in R&D, QA and production. This includes applications and solutions for customers within the fields of aerospace, automotive, audiology, and consumer electronics. GRAS microphones are designed to live up to the high quality, durability and accuracy that our customers have come to expect and trust.

GRAS Sound & Vibration is represented through subsidiaries and distributors in more than 40 countries and is part of Axiometrix Solutions, a leading test solutions provider comprised of globally recognized measurement brands. Read more at www.GRASacoustics.com

www.GRASacoustics.com

GRAS

An Axiometrix Solutions Brand