GRAS 46DE

1/8'' CCP Pressure Standard Microphone Set

Freq range: 6.5 Hz to 140 kHz
Dyn range: 52 dB(A) to 174 dB
Sensitivity: 0.8 mV/Pa

The GRAS 46DE is a 1/8'' CCP Pressure Microphone Set. The preamplifier is 1/8", making it the world's smallest microphone set.

GRAS Sound & Vibration
Skovlytoften 33, 2840 Holte, Denmark
www.grasacoustics.com

Introduction

46DE is a low-sensitivity pressure microphone set for sound measurements at high levels and high frequencies. It consists of a 40DD 1/8" pressure microphone and a 26CE 1/8" preamplifier.

Normally a 1/8" microphone is used with a 1/4" preamplifier, but for 46DE GRAS has developed a 1/8" preamplifier, making the 46DE microphone set the world's smallest.

A front-vented version is available, 46DE-FV 1/8'' CCP Pressure Standard Microphone Set, Front Vented.

Typical application and use

As the 46DE is smaller than any other measurement microphone, it can be used in any application where size constraints previously made it impossible to measure, be it separate microphones mounted in very confined spaces or a number of 46DEs mounted closely together for improved resolution. This fact opens the door to more application than we can suggest here.

46DE's low sensitivity and small size makes it ideal for measurements of high levels and high-frequencies, and for measurements of im pulsive noise.

The low sensitivity and very small form factor makes the 46DE extremely versatile with respect to signal levels, frequency range and applications.

It can be used for measurements of turbulence and flow in wind tunnels and for engine testing. It is also ideal for measurements of impulsive noise from for example inflating airbags and noise from guns and explosives.

The very small size makes it possible to measure inside even very small scale models - it can be fitted inside small scale models with minimal disturbance to the sound field. Also, it can measure the higher frequencies used in scale model testing.

The 46DE is a pressure microphone set and as such optimized for acoustic measurements of sound pressure at a boundary or wall; in which case the microphone forms part of the wall and measures the sound pressure on the wall itself. However, if used as you would a free-field microphone, it can be used up to at least 20 kHz before you need to apply free field corrections.

46DE is also ideal where a large number of microphones on a small area is desired.

Design

The GRAS 46DE is a high-performance standard microphone set. In our clean-room environment the set is assembled and sealed with a label.

Microphone
The microphone cartridge is the high-quality GRAS 40DD 1/8" Prepolarized Pressure Microphone, designed for long-term reliability in multiple environments.

Preamplifier
The preamplifier is the GRAS 26CE 1/8" Preamplifier.

The extremely small preamplifier is divided into three parts, 1) an input section, (3mm in diameter) that is attached to microphone, 2) a length of cable and 3) the output section located at the other end of the cable in the same housing as the connector. In this way it has been possible to make the part of the preamplifier close to microphone very small, while the more space-demanding electronics in the output stage is located at the other end of the cable where it does not disturb the sound field or poses space-based restrictions on the mounting options.

The three parts constituting the preamplifier are factory assembled as a complete unit that cannot be disassembled. The cable between the input and output section is 1 meter, longer cable lengths are not available as they would influence the performance negatively.

This cable is a special multi-screened type spefically developed for 46DE. Despite the extra screening, the 46DE microphone set is a little more sensitive to EMC than microphone sets with conventional preamplifiers.

Compatibility

To perform as specified the GRAS 46DE microphone set requires a constant current input module that can deliver 4 mA and 24 V unloaded CCP voltage supply. If the constant current supply is lower, the capability of driving long cables is reduced and consequently the upper frequency is reduced. If the voltage supply is lower it will influence the upper dynamic range.

The microphone set is terminated with a Microdot connector. Ready to use coax cable assemblies of various types and lengths are available in standard as well as customized lengths.

The 46DE is delivered with Generation II TEDS. The calibration data is programmed into the built-in TEDS according to IEEE 1451.4 using UDID I27-0-0-0U. If your measurement platform supports Transducer Electronic Data Sheets you will be able to read and write data like properties and calibration data.

Generation II TEDS chip (DS2431) may require updated system software.

System verification

The functionality of TEDS is very useful to determine which microphone is connected to which input channel. However, it is not a check of whether the microphone is within specifications or not. For daily verification and check of your measurement setup, we therefore recommend using a sound source like the GRAS 42AG Sound Calibrator.

For proper sensitivity calibration we recommend using a reference sound source like the GRAS 42AP Intelligent Pistonphone.

Calibration

When leaving the factory, all GRAS microphones have been calibrated in a controlled laboratory environment using traceable calibration equipment. Depending on the use, measurement environment and internal quality control programs we recommend that the microphone is recalibrated at least once a year.

We offer two kinds of calibration as an optional after-sales service: GRAS Traceable Calibration and GRAS Accredited Calibration.

GRAS Traceable Calibration is a traceable calibration performed by trained personnel under controlled conditions according to established procedures and standards. This is identical to the rigorous calibration that all GRAS microphones are subjected to as an integral part of our quality assurance.

GRAS Accredited Calibration is performed by the GRAS Accredited Calibration Laboratory that has been accredited in accordance with ISO 17025 by DANAK, the Danish Accreditation Fund.

If you want a new microphone set delivered with an accredited calibration in stead of the default factory calibration, specify this when ordering.

Learn more at gras/calib.

Quality and warranty

Technology

GRAS microphone sets are made of components from our proven standard portfolio and are all manufactured of high-quality material and branded parts that were chosen and processed to ensure life-long stability and robustness.

All parts are manufactured and assembled at the factory in Denmark by skilled and dedicated operators in a verified clean-room environment. The microphone diaphragm, body and unique protection grid are made of high-grade stainless steel and make the microphone set resistant to physical damage as well as corrosion caused by aggressive air or gasses.

This, together with the enforced gold-plated microphone terminal guarantees a highly reliable connection. Thanks to the high quality, our warranty against defective materials and workmanship is 5 years.

Service

Should you by mistake damage the diaphragm on a GRAS microphone we will in most cases be able to exchange it at a very reasonable cost and short turn-around time. This not only protects your investment but also meets your quality assurance department since you do not have to worry about new serial numbers etc.

--

Specifications

Polarization/Connection		0 V / CCP
Frequency range (±1 dB)	Hz	10 to 25 k
Frequency range (±2 dB)	Hz	6.5 to 70 k
Frequency range (±3 dB)	Hz	6.5 to 140 k
Dynamic range lower limit with GRAS preamplifier	dB(A)	52
Dynamic range upper limit with GRAS preamplifier	dB	174
Set sensitivity @ 250 Hz (±3 dB)	mV/Pa	0.8
Output impedance	Ω	<50
Output Voltage Swing, min. @ 24-28 V CCP voltage supply	Vp	8
Power supply min. to max.	mA	2 to 20
Power supply min. to max. (single/balanced)	V	N/A
DC bias voltage, typ.	V	12
Microphone venting		Rear
IEC 61094-4 Compliance		WS3P
IEC 61094-4 Designation		WS2F
Temperature range, operation	°C / °F	-30 to 70 / -22 to 158
Temperature range, storage	°C / °F	-40 to 85 / -40 to 185
Temperature coefficient @250 Hz	dB/°C / dB/°F	-0.01 / -0.006
Static pressure coefficient @250 Hz	dB/kPa	-0.014
Humidity range non condensing	% RH	0 to 90
Humidity coefficient @250 Hz	dB/% RH	-0.001
Influence of axial vibration @1 m/s²	dB re 20 µPa	59
TEDS UDID (IEEE 1451.4)		I27-0-0-0U
Connector type		Microdot 10/32
CE/RoHS compliant/WEEE registered		Yes / Yes/Yes
Weight	g / oz	7 / 0.247

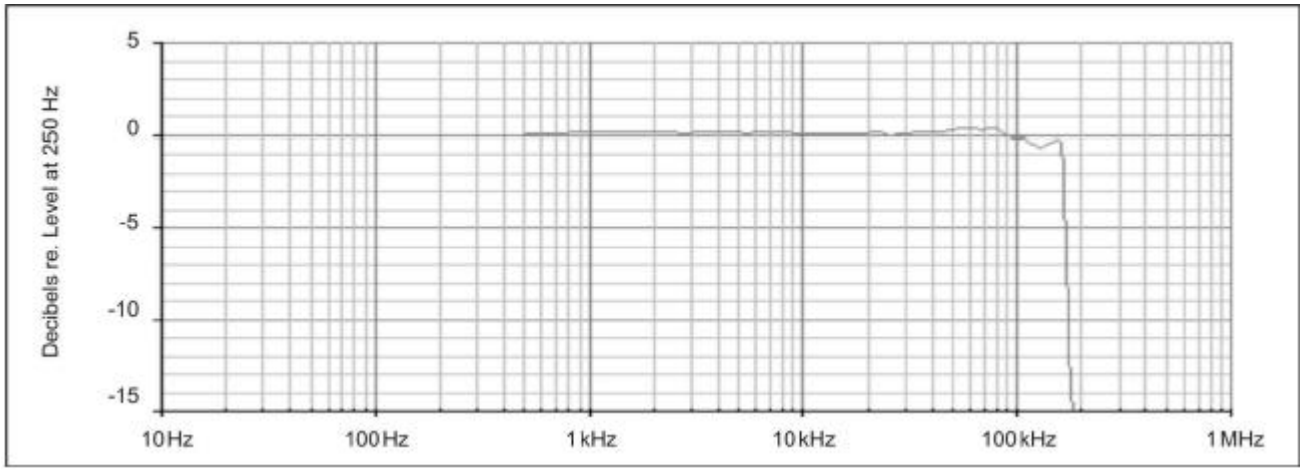

Typical frequency response (without protection grid).

GRAS Sound & Vibration reserves the right to change specifications and accessories without notice.

Dimensions

Dimensions in mm

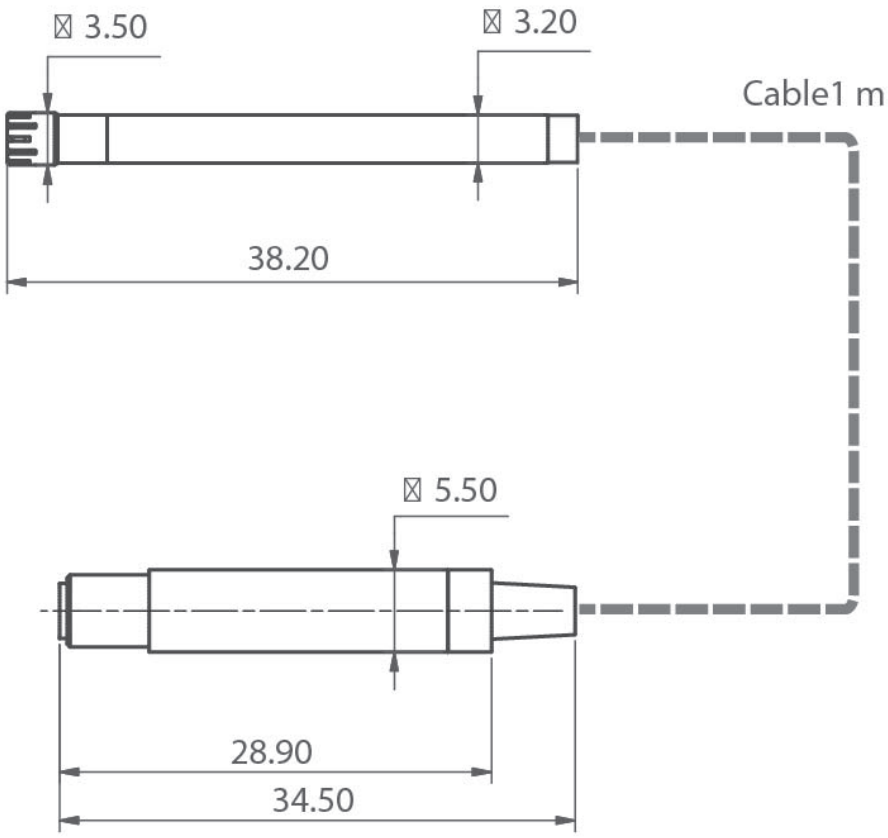

Ordering info

46DE	1/8'' CCP Pressure Standard Microphone Set. This is the standard rear vented version.
46DE-FV	1/8'' CCP Pressure Standard Microphone Set, Front Vented. Identical to 46DE, but front vented.

Optional items

Multifunction Sound Calibrator, Class 1

GRAS AA0070	3 m Microdot - BNC Cable
GRAS 12AL	1-Channel CCP Power Module with A-weighting filter
GRAS 12AQ	2-Channel Universal Power Module with signal conditioning and PC interface
GRAS 42AG	Multifunction Sound Calibrator, Class 1
GRAS 42AP	Intelligent Pistonphone, Class 0
GRAS AL0035	1/8" microphone set holder
GRAS RA0096	1/4" 5-Click Microphone Holder, Stainless Steel, for use with AL0035
GRAS RA0332	Holder for AL0021 Calibration Stand
GRAS AM0374	Windscreen 40mm 1/8'' (5 pieces)
GRAS RA0069	1/8" pistonphone adapter
GRAS RA0333	1/8" input adapter
GRAS CA0029	Traceable Calibration of Microphone Set
GRAS CA2301	Accredited Calibration of Microphone Set

GRAS Sound & Vibration reserves the right to change specifications and accessories without notice.

GRAS Worldwide

Subsidiaries and distributors in more than 40 countries

HEAD OFFICE, DENMARK
GRAS SOUND & VIBRATION
Skovlytoften 33
2840 Holte
Denmark
Tel: +45 4566 4046
www.GRASacoustics.com
gras@grasacoustics.com

USA
GRAS SOUND & VIBRATION
9290 SW Nimbus Avenue
Beaverton, OR 97008
Tel: 503-627-0832
Toll Free: 800-231-7350
www.GRASacoustics.com
sales-usa@grasacoustics.com

UK
GRAS SOUND & VIBRATION
Unit 115, Gibson House,
Ermine Business Park, Huntingdon,
Cambridgeshire, PE29 6XU
Tel: +44 (0)7762 584 202
www.GRASacoustics.com
sales-uk@grasacoustics.com

CHINA
GRAS SOUND & VIBRATION
Room 502, Building T1,
No.1398 Ali Center
Shenchang Road,
Minhang District,
Shanghai, China, 201107
Tel: +86 21 400-888-9826
www.GRASacoustics.cn
cnsales@grasacoustics.com

About GRAS Sound & Vibration

GRAS is a worldwide leader in the sound and vibration industry. We develop and manufacture state-of-the-art measurement microphones to industries where acoustic measuring accuracy and repeatability is of utmost importance in R&D, QA and production. This includes applications and solutions for customers within the fields of aerospace, automotive, audiology, and consumer electronics. GRAS microphones are designed to live up to the high quality, durability and accuracy that our customers have come to expect and trust.

GRAS Sound & Vibration is represented through subsidiaries and distributors in more than 40 countries and is part of Axiometrix Solutions, a leading test solutions provider comprised of globally recognized measurement brands. Read more at www.GRASacoustics.com

www.GRASacoustics.com

GRAS

An Axiometrix Solutions Brand