GRAS 46BG

1/4" CCP Pressure Standard Microphone Set, High Pressure

Freq range: 3.15 Hz to 70 kHz
Dyn range: 60 dB(A) to 184 dB
Sensitivity: 0.25 mV/Pa

The GRAS 46BG is a 1/4" CCP pressure microphone set for measuring very high sound pressure levels.
Read more about **the advantages of using 1/4" measurement microphones** here

GRAS Sound & Vibration
Skovlytoften 33, 2840 Holte, Denmark
www.grasacoustics.com

Introduction

The 46BG is a pressure microphone set and as such optimized for acoustic measurements of the sound source in a closed coupler or the measurement of sound pressure at a boundary or wall; in which case the microphone forms part of the wall and measures the sound pressure on the wall itself.

Two front-vented versions are available, the 46BG-FV 1/4" CCP Pressure Microphone Set, High Pressure, Front Vented and 46BG-FV-HT 1/4" CCP Pressure Microphone Set, High Temp, Front Vented.

Design

The GRAS 46BG is a high-performance standard microphone set. In our clean-room environment the set is assembled and sealed with a label. However, the microphone set can be dismounted, if you wish to use the components separately.

Microphone
The microphone cartridge is the high-quality IEC 61094 WS3P standardized GRAS 40BG 1/4" Prepolarized Pressure Microphone, designed for long-term reliability in multiple environments.

Preamplifier
The preamplifier is the GRAS 26CB Preamplifier which is inclusive TEDS and based on our well-known circuit board substrates. In the industry these are famous for their low self-noise, wide frequency and excellent slew rate performance.

Compatibility

To perform as specified the GRAS 46BG microphone set requires a constant current input module that can deliver 4 mA and 24 V unloaded CCP voltage supply. If the constant current supply is lower, the capability of driving long cables is reduced and consequently the upper frequency is reduced. If the voltage supply is lower it will influence the upper dynamic range.

The microphone set is terminated with a 10/32 Microdot female connector. Ready to use coax cable assemblies of various types and lengths are available in standard as well as customized lengths.

The 46BG is IEEE 1451.4 TEDS v. 1.0 compliant. If your measurement platform supports Transducer Electronic Data Sheets you will be able to read and write data like properties and calibration data.

Calibration

When leaving the factory, all GRAS microphones have been calibrated in a controlled laboratory environment using traceable calibration equipment. Depending on the use, measurement environment and internal quality control programs we recommend that the microphone is recalibrated at least once a year.

We offer two kinds of calibration as an optional after-sales service: GRAS Traceable Calibration and GRAS Accredited Calibration.

GRAS Traceable Calibration is a traceable calibration performed by trained personnel under controlled conditions according to established procedures and standards. This is identical to the rigorous calibration that all GRAS microphones are subjected to as an integral part of our quality assurance.

GRAS Accredited Calibration is performed by the GRAS Accredited Calibration Laboratory that has been accredited in accordance with ISO 17025 by DANAK, the Danish Accreditation Fund.

If you want a new microphone set delivered with an accredited calibration in stead of the default factory calibration, specify this when ordering.

Learn more at gras/calib.

Quality and warranty

All GRAS microphones are made of high-quality materials that will ensure life-long stability and robustness. The microphones are all assembled in verified clean-room environments by skilled and dedicated operators with many years of expertise in this field.

The microphone diaphragm, body, and improved protection grid are made of high-grade stainless steel, which makes the microphone resistant to physical damage, as well as corrosion caused by aggressive air or gasses.

This, combined with the reinforced gold-plated microphone terminal which guarantees a highly reliable connection, enables GRAS to offer 5 years warranty against defective materials and workmanship.

Service

If you accidentally damage the diaphragm on a GRAS microphone, we can — in most cases — replace it at a very reasonable cost and with a short turn-around time. This not only protects your investment, but also pleases your quality assurance department because you don't have to worry about new serial numbers, etc.

Specifications

Polarization/Connection		0 V / CCP
Frequency range (±2 dB)	Hz	3.15 to 70 k
Dynamic range lower limit with GRAS preamplifier	dB(A)	60
Dynamic range upper limit with GRAS preamplifier	dB	184
Set sensitivity @ 250 Hz (±2 dB)	mV/Pa	0.25
Set sensitivity @ 250 Hz (±2 dB)	dB re 1V/Pa	- 72
Output impedance	Ω	<50
Output Voltage Swing, min. @ 24-28 V CCP voltage supply	Vp	8
Power supply min. to max.	mA	2 to 20
Power supply min. to max. (single/balanced)	V	N/A
DC bias voltage, typ.	V	12
Microphone venting		Rear
IEC 61094-4 Designation		WS3P
Temperature range, operation	°C / °F	-30 to 85 / -22 to 185
Temperature range, storage	°C / °F	-40 to 85 / -40 to 185
Temperature coefficient @250 Hz	dB/°C / dB/°F	-0.01 / -0.006
Static pressure coefficient @250 Hz	dB/kPa	-0.01
Humidity range non condensing	% RH	0 to 90
Humidity coefficient @250 Hz	dB/% RH	0.001
Influence of axial vibration @1 m/s²	dB re 20 µPa	63
TEDS (IEEE 1451.4)		27 v. 1.0
Connector type		Microdot 10/32
CE/RoHS compliant/WEEE registered		Yes/Yes/Yes
Weight	g / oz	8 / 0.282

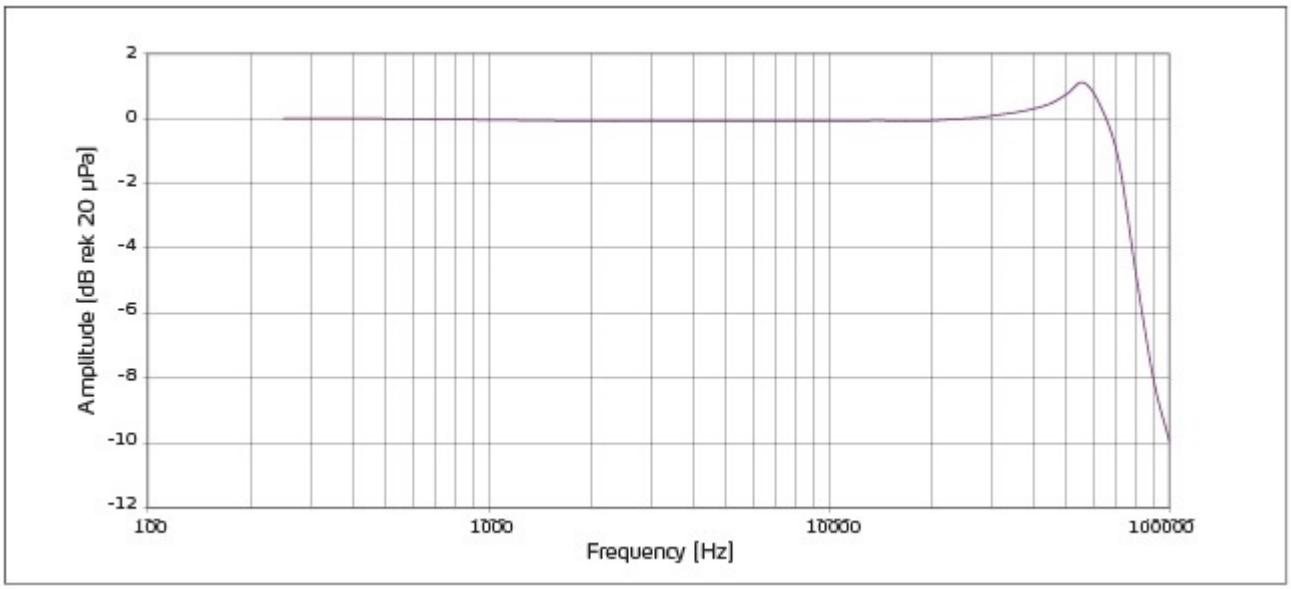

Typical pressure frequency response of the 46BG

GRAS Sound & Vibration reserves the right to change specifications and accessories without notice.

Dimensions

Dimensions in mm

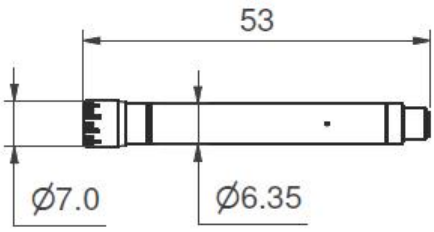

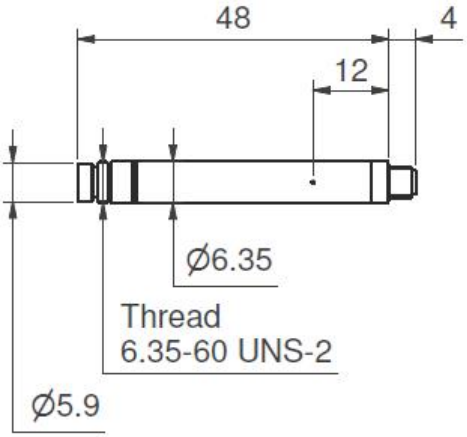

Optional items

GRAS AA0070	3 m Microdot - BNC Cable
GRAS AL0029	1/4" Microphone Holder, POM
GRAS AL0013	1/4" Microphone Holder, Stainless Steel
GRAS AL0005	Swivel head
GRAS AL0006	Tripod
GRAS RA0022	1/4" Nosecone
GRAS AM0071	Windscreen for 1/4" Microphones
GRAS RA0127	Rain-protection cap for 1/4” microphones
GRAS 12AL	1-Channel CCP Power Module with A-weighting filter
GRAS 12AQ	2-Channel Universal Power Module with signal conditioning and PC interface
GRAS 42AG	Multifunction Sound Calibrator, Class 1
GRAS 42AP	Intelligent Pistonphone, Class 0
GRAS CA0029	Traceable Calibration of Microphone Set
GRAS CA2301	Accredited Calibration of Microphone Set

GRAS Sound & Vibration reserves the right to change specifications and accessories without notice.

GRAS Worldwide

Subsidiaries and distributors in more than 40 countries

HEAD OFFICE, DENMARK
GRAS SOUND & VIBRATION
Skovlytoften 33
2840 Holte
Denmark
Tel: +45 4566 4046
www.GRASacoustics.com
gras@grasacoustics.com

USA
GRAS SOUND & VIBRATION
9290 SW Nimbus Avenue
Beaverton, OR 97008
Tel: 503-627-0832
Toll Free: 800-231-7350
www.GRASacoustics.com
sales-usa@grasacoustics.com

UK
GRAS SOUND & VIBRATION
Unit 115, Gibson House,
Ermine Business Park, Huntingdon,
Cambridgeshire, PE29 6XU
Tel: +44 (0)7762 584 202
www.GRASacoustics.com
sales-uk@grasacoustics.com

CHINA
GRAS SOUND & VIBRATION
Room 502, Building T1,
No.1398 Ali Center
Shenchang Road,
Minhang District,
Shanghai, China, 201107
Tel: +86 21 400-888-9826
www.GRASacoustics.cn
cnsales@grasacoustics.com

About GRAS Sound & Vibration

GRAS is a worldwide leader in the sound and vibration industry. We develop and manufacture state-of-the-art measurement microphones to industries where acoustic measuring accuracy and repeatability is of utmost importance in R&D, QA and production. This includes applications and solutions for customers within the fields of aerospace, automotive, audiology, and consumer electronics. GRAS microphones are designed to live up to the high quality, durability and accuracy that our customers have come to expect and trust.

GRAS Sound & Vibration is represented through subsidiaries and distributors in more than 40 countries and is part of Axiometrix Solutions, a leading test solutions provider comprised of globally recognized measurement brands. Read more at www.GRASacoustics.com

www.GRASacoustics.com

GRAS

An Axiometrix Solutions Brand