GRAS 46AQ

1/2'' CCP Random Incidence Standard Microphone Set

Freq range: 3.15 Hz to 12.5 kHz
Dyn range: 17 dB(A) to 138 dB
Sensitivity: 50 mV/Pa

The 46AQ is a 1/2" CCP microphone set for random-incidence measurements.

GRAS Sound & Vibration
Skovlytoften 33, 2840 Holte, Denmark
www.grasacoustics.com

Introduction

Through a close cooperation with our customers, we know that data-safety is highly important because the costs related to unsuited and unreliable sensors may determine whether your project turns into a success or not.

For our users, data safety translates directly into requests for easier microphone selection, simple system configuration and reduction of measurement errors.

To meet these requirements, we invented the microphone set concept. It is simple, reliable and robust and consists of a microphone cartridge and preamplifier combination, which is calibrated as one unit. This eliminates errors because there is only one sensitivity value to account for and the risk of contaminating the interface is eliminated. Combine this with our unique and proven design and you have the most reliable measurement microphone sets available in the industry today.

Typical applications and use

The 46AQ is optimized to measure sound levels correctly in random (diffuse) sound fields e.g. caused by multiple sound sources or hard reverberant surfaces. Random incidence microphones are used e.g. inside vehicles.

Design

The GRAS 46AQ is a high-performance standard microphone set. In our clean-room environment the set is assembled and sealed with a label. However, the microphone set can be dismounted, if you wish to use the components separately.

Microphone
The microphone cartridge is the high-quality IEC 61094 WS2D standardized GRAS 40AQ 1/2" Prepolarized Random Incidence Microphone, designed for long-term reliability in multiple environments.

Preamplifier
The preamplifier is the GRAS 26CA Preamplifier which is inclusive TEDS and based on our well-known circuit board substrates. In the industry these are famous for their low self-noise, wide frequency and excellent slew rate performance.

Compatibility

To perform as specified the GRAS 46AQ microphone set requires a constant current input module that can deliver 4 mA and 24 V unloaded CCP voltage supply. If the constant current supply is lower, the capability of driving long cables is reduced and consequently the upper frequency is reduced. If the voltage supply is lower it will influence the upper dynamic range.

The microphone set is terminated with a BNC connector. Ready to use coax cable assemblies of various types and lengths are available in standard as well as customized lengths.

The 46AQ is IEEE 1451.4 TEDS v. 1.0 compliant. If your measurement platform supports Transducer Electronic Data Sheets you will be able to read and write data like properties and calibration data.

System verification

The functionality of TEDS is very useful to determine which microphone is connected to which input channel. However, it is not a check of whether the microphone is within specifications or not. For daily verification and check of your measurement setup, we therefore recommend using a sound source like the GRAS 42AG Sound Calibrator.

For proper sensitivity calibration we recommend using a reference sound source like the GRAS 42AP Intelligent Pistonphone.

Calibration

When leaving the factory, all GRAS microphones have been calibrated in a controlled laboratory environment using traceable calibration equipment. Depending on the use, measurement environment and internal quality control programs we recommend that the microphone is recalibrated at least once a year.

We offer two kinds of calibration as an optional after-sales service: GRAS Traceable Calibration and GRAS Accredited Calibration.

GRAS Traceable Calibration is a traceable calibration performed by trained personnel under controlled conditions according to established procedures and standards. This is identical to the rigorous calibration that all GRAS microphones are subjected to as an integral part of our quality assurance.

GRAS Accredited Calibration is performed by the GRAS Accredited Calibration Laboratory that has been accredited in accordance with ISO 17025 by DANAK, the Danish Accreditation Fund.

If you want a new microphone set delivered with an accredited calibration in stead of the default factory calibration, specify this when ordering.

Learn more at gras/calib.

Quality and warranty

GRAS microphone sets are made of components from our proven standard portfolio and are all manufactured of high-quality material and branded parts that were chosen and processed to ensure life-long stability and robustness.

All parts are manufactured and assembled at the factory in Denmark by skilled and dedicated operators in a verified clean-room environment. The microphone diaphragm, body and unique protection grid are made of high-grade stainless steel and make the microphone set resistant to physical damage as well as corrosion caused by aggressive air or gasses.

This, together with the enforced gold-plated microphone terminal guarantees a highly reliable connection. Thanks to the high quality, our warranty against defective materials and workmanship is 5 years.

Service

Should you by mistake damage the diaphragm on a GRAS microphone we will in most cases be able to exchange it at a very reasonable cost and short turn-around time. This not only protects your investment but also meets your quality assurance department since you do not have to worry about new serial numbers etc.

Specifications

Polarization/Connection		0 V / CCP
Frequency range (±1 dB)	Hz	12.5 to 8 k
Frequency range (±2 dB)	Hz	3.15 to 12.5 k
Frequency range (±3 dB)	Hz	3.15 to 16 k
Dynamic range lower limit with GRAS preamplifier	dB(A)	17
Dynamic range upper limit with GRAS preamplifier	dB	138
Set sensitivity @ 250 Hz (±2 dB)	mV/Pa	50
Set sensitivity @ 250 Hz (±2 dB)	dB re 1V/Pa	-26
Output impedance	Ω	<50
Output Voltage Swing, min. @ 24-28 V CCP voltage supply	Vp	8
Power supply min. to max.	mA	2 to 20
Power supply min. to max. (single/balanced)	V	N/A
DC bias voltage, typ.	V	12
Microphone venting		Rear
IEC 61094-4 Designation		WS2D
Temperature range, operation	°C / °F	-30 to 85 / -22 to 185
Temperature range, storage	°C / °F	-40 to 85 / -40 to 185
Temperature coefficient @250 Hz	dB/°C / dB/°F	-0.01 / -0.006
Static pressure coefficient @250 Hz	dB/kPa	-0,011
Humidity range non condensing	% RH	0 to 90
Humidity coefficient @250 Hz	dB/% RH	-0,001
Influence of axial vibration @1 m/s²	dB re 20 µPa	62
TEDS (IEEE 1451.4)		27 v. 1.0
Connector type		BNC
CE/RoHS compliant/WEEE registered		Yes/Yes/Yes
Weight	g / oz	33 / 1.164

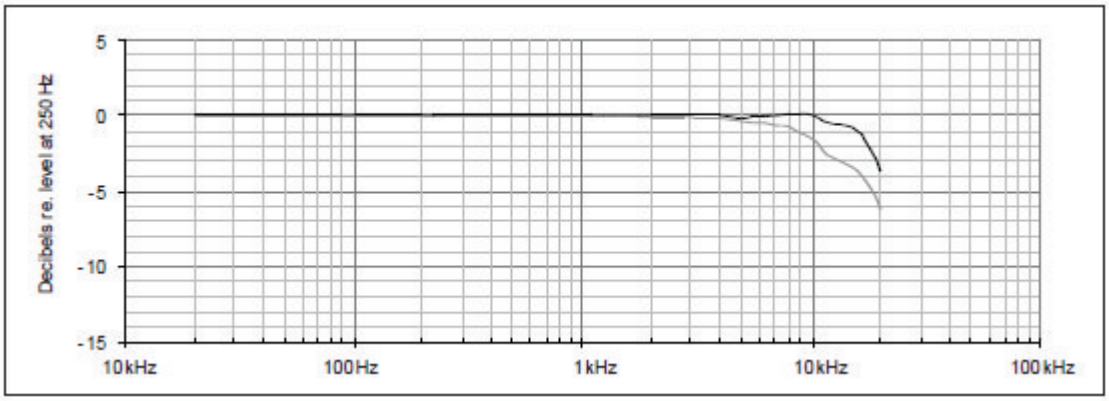

Typical frequency response. Upper curve shows response in a diffuse sound field (random incidence), lower curve shows pressure response.

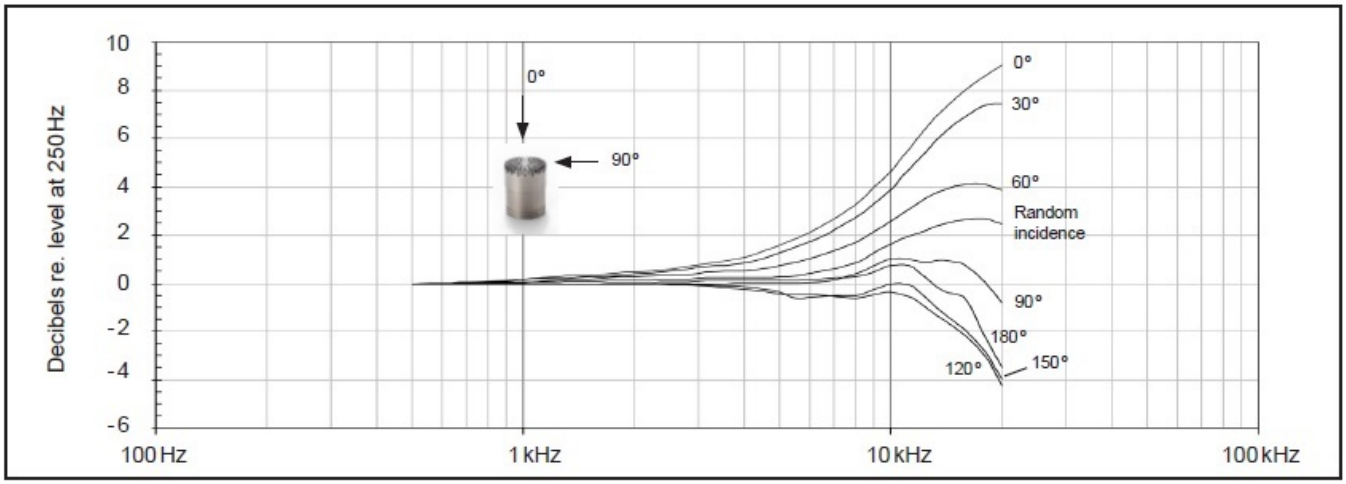

Free-field corrections for different angles of incidence

GRAS Sound & Vibration reserves the right to change specifications without notice.

Dimensions

Dimensions in mm

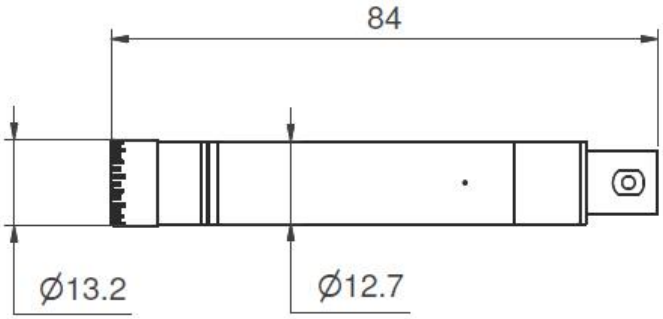

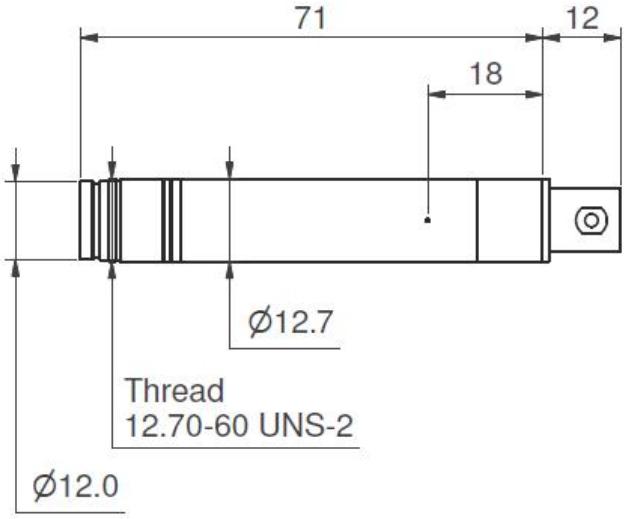

Optional items

GRAS AA0035	3 m BNC - BNC Cable
GRAS AL0008	1/2" Microphone Holder, POM
GRAS AL0012	1/2" Microphone Holder, Stainless Steel
GRAS AL0005	Swivel head
GRAS AL0006	Tripod
GRAS RA0020	1/2" Nosecone
GRAS AM0069	Windscreen for 1/2" Microphones
GRAS RA0131	1/2" Rain protection cap
GRAS 12AL	1-Channel CCP Power Module with A-weighting filter
GRAS 12AQ	2-Channel Universal Power Module with signal conditioning and PC interface
GRAS 42AG	Multifunction Sound Calibrator, Class 1
GRAS 42AP	Intelligent Pistonphone, Class 0
GRAS CA0029	Traceable Calibration of Microphone Set
GRAS CA2301	Accredited Calibration of Microphone Set

GRAS Sound & Vibration reserves the right to change accessories without notice.

GRAS Worldwide

Subsidiaries and distributors in more than 40 countries

HEAD OFFICE, DENMARK
GRAS SOUND & VIBRATION
Skovlytoften 33
2840 Holte
Denmark
Tel: +45 4566 4046
www.GRASacoustics.com
gras@grasacoustics.com

USA
GRAS SOUND & VIBRATION
9290 SW Nimbus Avenue
Beaverton, OR 97008
Tel: 503-627-0832
Toll Free: 800-231-7350
www.GRASacoustics.com
sales-usa@grasacoustics.com

UK
GRAS SOUND & VIBRATION
Unit 115, Gibson House,
Ermine Business Park, Huntingdon,
Cambridgeshire, PE29 6XU
Tel: +44 (0)7762 584 202
www.GRASacoustics.com
sales-uk@grasacoustics.com

CHINA
GRAS SOUND & VIBRATION
Room 502, Building T1,
No.1398 Ali Center
Shenchang Road,
Minhang District,
Shanghai, China, 201107
Tel: +86 21 400-888-9826
www.GRASacoustics.cn
cnsales@grasacoustics.com

About GRAS Sound & Vibration

GRAS is a worldwide leader in the sound and vibration industry. We develop and manufacture state-of-the-art measurement microphones to industries where acoustic measuring accuracy and repeatability is of utmost importance in R&D, QA and production. This includes applications and solutions for customers within the fields of aerospace, automotive, audiology, and consumer electronics. GRAS microphones are designed to live up to the high quality, durability and accuracy that our customers have come to expect and trust.

GRAS Sound & Vibration is represented through subsidiaries and distributors in more than 40 countries and is part of Axiometrix Solutions, a leading test solutions provider comprised of globally recognized measurement brands. Read more at www.GRASacoustics.com

www.GRASacoustics.com

GRAS

An Axiometrix Solutions Brand